RICE
ENGINEERING
105 School Creek Trail | Luxemburg, WI 54217
(P) 920.845.1042 | (F) 920.845.1048

Captiveaire - Seismic Curb Analysis

Seismic Design Calculations

Project Location:
N/A, Not Applicable
REI Project # R16-06-271

Prepared for:
Captiveaire - Raleigh, NC
9/22/2016

Design Criteria:

1. Calculations are rated for the worst case U.S.A. seismic:
Ss = 340%; Sds = 227%; z/h = 1; SSC = D; RC = II; ap = 2.5; Rp = 3.0; Fp = 2.27; F.ph = 1.59 (ASD); F.pv = 0.28 [MIN] to 1.32 [MAX] (ASD)

2. ***Systems included in this:***

Unit	Weight (#)	COG* (in)
15	997	67.25
20	2053	38.5
25	2398	47.5
30	3670	47.5
36	4450	53.5
225	4298	109
230	4995	109
236	5600	145

**COG refers to the distance between the Bottom of the Curb and the Center of Gravity of the supported Equipment*

The structural calculations within this report are not intended to be submitted as project specific structural calculations. However, the details shown in this report provide an acceptable engineered design to resist the anticipated worst case seismic loading conditions per IBC 2012 & ASCE-7/10.

3. Max weight of fans/equipment are listed for each curb option. Center of gravity must be located at or below vertical elevation y1 from the roof elevations. Center of gravity is assumed to occur at the center of the footprint of the curb (half of length & half of width).

4. Code checks for Fans, Equipment, and the attachment thereof are not included in these calculations and are **DESIGNED BY OTHERS.**

5. Curbs and washers are to be constructed from sheet metal; minimum yield strength: **Fy = 33 ksi.**

6. Field and shop welding shall be **E70XX or better** to have a minimum tensile strength of **Ft = 70 ksi or better.**

7. Concrete anchors shall be a **wedge** type anchor with the size, embed depth and spacing as per the calculations. Anchors shall be installed per the manufacturer's specifications.

8. Concrete shall be 6" thick, normal weight, cracked concrete with a compressive strength **f'c = 3,000 psi MIN.**

9. Lag Screws shall conform to **ANSI/ASME Standard B18.6.1-1981, minimum bending yield strengths of Fby=45 ksi.** Install as specified in the callouts located in this report.

10. Wood is assumed to be **Spruce-Pine-Fir, SG = 0.42.**

11. Design of material separation to prevent reaction between dissimilar materials **not designed by Rice Engineering Inc.**

Disclaimer:

This Certification is limited to the structural seismic design of the curb and anchorage of curb to substrate.

It does NOT include responsibility for:

- Structural design of hardware, clevises, and turnbuckles.
- Design of material separation to prevent reaction between dissimilar materials.
- Design of air and water infiltration prevention.
- The manufacture, assembly, or installation of the system.
- Quantities of materials or dimensional accuracy of drawings

Engineers Design Approval Stamp:

REGISTERED PROFESSIONAL ENGINEER
GUSTAVE L. SCHMOLL
6131
Exp. 9-30-2016
STRUCTURAL
STATE OF CALIFORNIA

09/22/2016

RICE
ENGINEERING
105 School Creek Trail | Luxemburg, WI 54217
(P) 920.845.1042 | (F) 920.845.1048

Captiveaire - Seismic Curb Analysis

Seismic Design Calculations

Project Location:
N/A, Not Applicable
REI Project # R16-06-271

Prepared for:
Captiveaire - Raleigh, NC
9/22/2016

Page:	Description:	Date:	Revision:
EL	Max Seismic (USA)	7/28/16	
01	Corner of Curb in Compression	7/28/16	
02	Single Blower	7/28/16	
03	Double Blower	7/28/16	
F1	0.5 in Lag Bolt into SPF	7/28/16	
F2	AAMA Allowables	7/28/16	
F3	Kwik Bolt TZ	7/28/16	

Disclaimer:

This Certification is limited to the structural seismic design of the curb and anchorage of curb to substrate.

It does NOT include responsibility for:

- Structural design of hardware, clevises, and turnbuckles.
- Design of material separation to prevent reaction between dissimilar materials.
- Design of air and water infiltration prevention.
- The manufacture, assembly, or installation of the system.
- Quantities of materials or dimensional accuracy of drawings

Engineers Design Approval Stamp:

REGISTERED PROFESSIONAL ENGINEER
GUSTAVE L. SCHMOLL
6131
Exp. 9-30-2016
STRUCTURAL
STATE OF CALIFORNIA

09/22/2016

Washer	Detail Ref.	Sheet No: E1

Rooftop Curb Attachment Plate

Steel Support Block, 3" x 3" by .250" Thick steel plate and galvanized for weather resistance.

Part number for the plate is 91133A140 (Macola# A0017326)

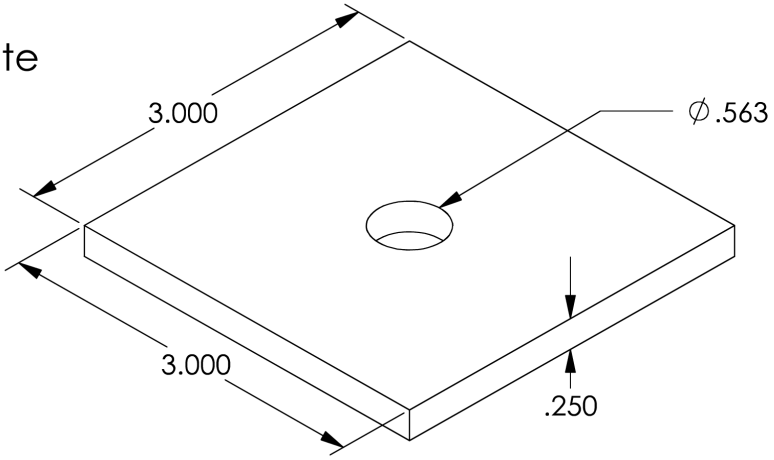

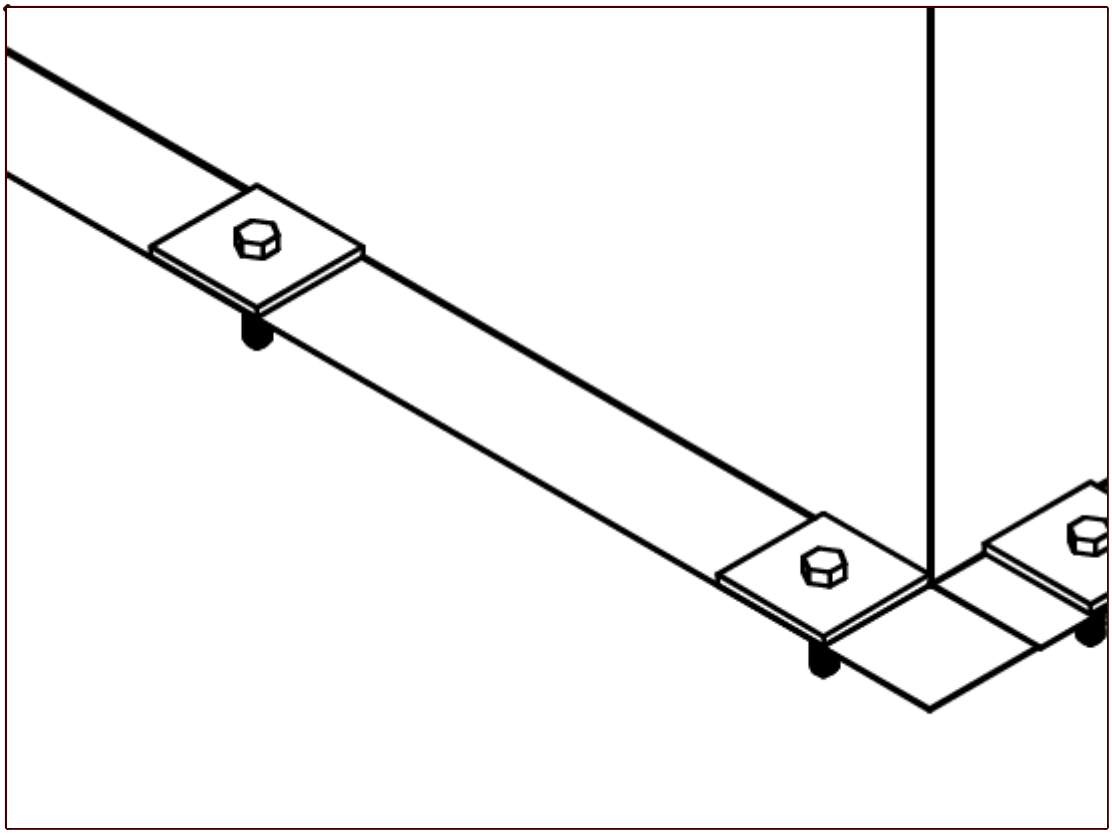

RICE ENGINEERING Template:	105 School Creek Trail Luxemburg, WI 54217 Phone: (920) 617-1042 Fax: (920) 617-1100 www.rice-inc.com	Project Description: **- Captiveaire -** **Seismic Curb Analysis**	Job No: R16-06-271 Engineer: KML Date: 9/9/16 Chk By:	Sheet No: E1 Rev: Date:

Max Seismic (USA)	Detail Ref.	Sheet No: EL

Inputs:

Seismic Design Force for Non-Structural Components: (CH. 13 ASCE 7-10):

$S_S := 340\%$ Mapped Spectral Response Acceleration at Short Periods (Figure 22-1)

$S_1 := 100\%$ Mapped Spectral Response Acceleration at Long Periods (Figure 22-2)

SSC = > D Soil Site Class (Assume Site Class "D" if Unknown per Section 20.1)

RC = > II Risk Category (Table 1.5-1)

MECHANICAL AND ELECTRICAL COMPONENTS	a_p[a]	R_p[b]
Roof-mounted stacks, cooling and electrical towers laterally braced below their center of mass.	2 ½	3

$a_p := 2.5$ Component and Anchor Amplification Factor (Table 13.5-1)

$R_p := 3$ Component and Anchor Response Modification Factor (Table 13.5-1)

$z := 1$ Height in Structure of Point of Attachment of Component With Respect to Base

$h := 1$ Average Roof Height of Structure With Respect to the Base

Calculations:

All Calculations Below This Line Are Automatic

$\rho := 1.0$ Redundancy Factor (See Section 12.3.4)

$F_a = 1.00$ Short-Period Site Coefficient (Table 11.4-1)

$F_v = 1.50$ Long-Period Site Coefficient (Table 11.4-2)

$S_{DS} := (2 \div 3) \cdot F_a \cdot S_S = 227 \cdot \%$ Design Spectral Response Acceleration at Short Period (Eqn 11.4-3)

$S_{D1} := (2 \div 3) \cdot F_v \cdot S_1 = 100 \cdot \%$ Design Spectral Response Acceleration At Long Period (Eqn 11.4-4)

$I_p = 1$ Component Importance Factor (See Section 13.1.3)

$$f_p := \frac{0.4 \cdot a_p \cdot S_{DS}}{R_p \div I_p} \cdot \left[1 + \left[2 \cdot \left(\frac{z}{h}\right)\right]\right] = 2.27$$ (Eqn 13.3-1 with W_p Excluded)

$F_{pmin} := 0.3 \cdot S_{DS} \cdot I_p = 0.68$ (Eqn 13.3-3)

$F_{pmax} := 1.6 \cdot S_{DS} \cdot I_p = 3.63$ (Eqn 13.3-2)

$$F_{punit} := \begin{cases} F_{pmin} & \text{if } f_p < F_{pmin} \\ F_{pmax} & \text{if } f_p > F_{pmax} \\ f_p & \text{otherwise} \end{cases} = 2.27$$

$F_{punit} = 2.27$ Unfactored Unit Seismic Lateral Force

$F_{pvunit} := 0.2 \cdot S_{DS} = 0.45$ Unfactored Unit Seismic Vertical Force

$F_p := F_{punit} \cdot W_p \cdot unit = 0.02\,psi$ Unfactored Seismic Lateral Force

$D := W_p \cdot unit = 0.01\,psi$ Unfactored Component Dead Loads

Seismic Design Category (SDC) per ASCE 7 Section 11.6 SDC = "E"

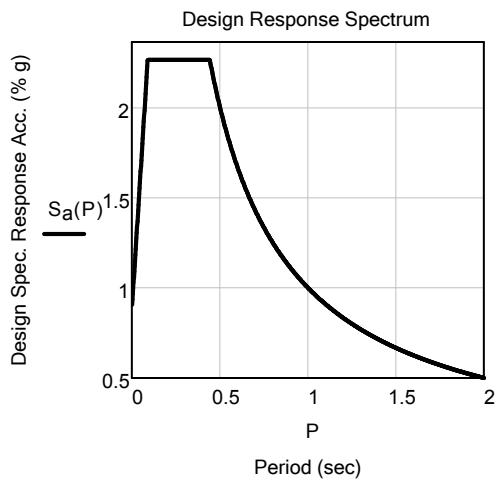

Unit Forces on Component/Anchor (Load Combinations per Section 12.4.2.3)

	Seismic Lateral Load	Min. Seismic (Downward Vertical) Dead Load	Max. Seismic (Downward Vertical) Dead Load
ASD:	$EL_{hASDunit} := 0.7\rho \cdot F_{punit} = 1.59$	$EL_{uvASDunit} := 0.6 - 0.14 \cdot S_{DS} = 0.28$	$EL_{dvASDunit} := 1.0 + 0.14 S_{DS} = 1.32$
LRFD:	$EL_{hLRFDunit} := \rho \cdot F_{punit} = 2.27$	$EL_{uvLRFDunit} := 0.9 - 0.2 \cdot S_{DS} = 0.45$	$EL_{dvLRFDunit} := 1.2 + 0.2 S_{DS} = 1.65$

INPUTS:

Corner of Curb in Compression	Detail Ref.	Sheet No: 01

Angle || Custom

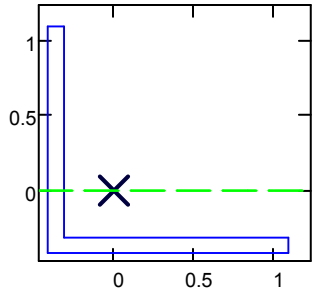

Shape =

	0	1	2
0	"Angle"	0	0
1	"Depth = "	1.5	"in."
2	"Width = "	1.5	"in."
3	"Thickness = "	0.102	"in."
4	"x.bar.right = "	1.087	"in"
5	"x.bar.left = "	0.413	"in"
6	"y.bar.top = "	1.087	"in"
7	bar.bottom = "	0.413	"in"
8	"Area :"	0.2956	"in^2"
9	"I.x :"	0.06487	"in^4"
10	"I.y :"	0.06487	"in^4"
11	"ALPHA :"	0.7854	"rad."
12	"Iz :"	0.02618	"in^4"
13	"Iw :"	0.10357	"in^4"
14	"S.x.Top :"	0.05967	"in^3"
15	"S.x.Bot :"	0.15715	"in^3"
16	"S.y.right :"	0.05967	"in^3"
17	"S.y.left :"	0.15715	"in^3"
18	"S.z.heal :"	0.04485	"in^3"
19	"S.z.toes :"	0.04769	"in^3"
20	y.lowerRight :"	0.09764	"in^3"
21	w.upperLeft :"	0.09764	"in^3"
22	"r.x :"	0.46847	...

Section Properties

$b_l := Shape_{1,1} \cdot in = 1.5\,in$ — Longer Leg of Angle

$b_s := Shape_{2,1} \cdot in = 1.5\,in$ — Shorter Leg of Angle

$t := Shape_{3,1} \cdot in = 0.1\,in$ — Thickness of Angle

$A_g := Shape_{8,1} \cdot in^2 = 0.3 \cdot in^2$ — Gross Area of Member

Coordinates of shear center with respect to the centroid

$x_o := \left(Shape_{5,1} - 0.5 \cdot Shape_{3,1}\right) \cdot in = 0.36\,in$ — (x-axis)

$y_o := \left(Shape_{7,1} - 0.5 \cdot Shape_{3,1}\right) \cdot in = 0.36\,in$ — (y-axis)

$I_x := Shape_{9,1} \cdot in^4 = 0.06 \cdot in^4$ — Moment of intertia about x-axis

$I_y := Shape_{10,1} \cdot in^4 = 0.06 \cdot in^4$ — Moment of intertia about y-axis

$r_x := Shape_{22,1} \cdot in = 0.47\,in$ — Radius of gyration about x-axis

$r_y := Shape_{23,1} \cdot in = 0.47\,in$ — Radius of gyration about y-axis

$r_z := Shape_{24,1} \cdot in = 0.3\,in$ — Radius of gyration about z-axis

$J := Shape_{26,1} \cdot in^4 = 0.00103 \cdot in^4$ — Torsional Constant

$C_w := Shape_{28,1} \cdot in^6 = 0.0002 \cdot in^6$ — Warping Constant

Material Properties

$G \equiv 11200 \cdot ksi$ — Shear Modulus of Elasticity

$E \equiv 29000 \cdot ksi$ — Modulus of Elasticity

$F_y \equiv 30000 \cdot psi$ — Yield Strength

Column Parameters

$L \equiv 24in$ — Length of Column

$K_x \equiv 1.0$ — Effective length factor for torsional buckling about x-axis

$K_y \equiv 1.0$ — Effective length factor for torsional buckling about y-axis

$K_z \equiv 1.0$ — Effective length factor for torsional buckling about z-axis

NOTE: Single angle members with different end conditions from those described in Section E5(a) or (b), with leg length ratios greater than 1.7, or with transverse loading shall be evaluated for combined axial load and flexure using the provisions of Chapter H. End connection to different legs on each end or to both legs, the use of single bolts or the attachment of adjacent web members to opposite sides of the gusset plate or chord shall constitute different end conditions requiring the use of Chapter H provisions. (NOTE: Chapter H is the *Design of Members for Combined Forces and Torsion*)

Web Members of Box or Space Trusses with Adjacent Web Members Attached to the Same Side of the Gusset Plate or Chord

Desc = "Web Members of Box or Space Trusses with Adjacent Web Members Attached to the Same Side of the Gusset Plate or Chord"

E5-Section = "b"

Connected Through LONGER Leg

ConnDesc = "Connected Through LONGER Leg"

Connection = "LONG"

If Connecting throught SHORTER or LONGER Leg, Verify that:

(1) members are loaded at the ends in compression through the same one leg;
(2) members are attached by welding or by minimum two-bolt connections; &
(3) there are no intermediate transverse loads.
(4) $"\left(b_l \div b_s, "<", 1.7\right) = "1 \le 1.7 \;\therefore\; PASS"$

E2, EFFECTIVE LENGTH

$r := \min(r_x, r_y, r_z) = 0.3\,in$ Radius of gyration

$K \equiv \min(K_x, K_y, K_z) = 1$ Effective length factor for torsional buckling

$(KL/r) := (K \cdot L) \div r = 80.64$

E5, SINGLE ANGLE COMPRESSION MEMBERS

The nominal compressive strength, P.n, of single angle members shall be determined in accordance with Section E3 or Section E7, as appropriate, for axially loaded members, as well as those subject to the slenderness modification of Section E5(a) or E5(b), provided the members meet the criteria imposed.

The Effects of eccentricity on single angle members are permitted to be neglected when the members are evaluated as axially loaded compression members using one of the effective slenderness ratios specified below, provided that: (1) members are loaded at the ends in compression through the same one leg; (2) members are attached by welding or by minimum two-bolt connections; and (3) there are no intermediate transverse loads.

(c) Single angle members with different end conditions from those described in Section E5(a) or (b), with leg length ratios greater than 1.7, or with transverse loading shall be evaluated for combined axial load and flexure using the provisions of Chapter H. End connection to different legs on each end or to both legs, the use of single bolts or the attachment of adjacent web members to opposite sides of the gusset plate or chord shall constitute different end conditions requiring the use of Chapter H provisions. (NOTE: Chapter H is the *Design of Members for Combined Forces and Torsion*)

(a) For equal-leg angles or unequal-leg angles connected through the longer leg that are individual members or are web members of planar trusses with adjacent web members attached to the same side of the gusset plate or chord:

(i) When $"\left(\frac{L}{r_x}, "<", 80\right) = "51.23 \le 80 \;\therefore\; PASS"$:

$(KL/r)_{(E5\text{-}1)} := 72 + 0.75 \cdot \frac{L}{r_x} = 110.42$ ..... (E5-1)

$USE_{(E5\text{-}1)} := \frac{L}{r_x} \le 80 = 1$ ..... → "TRUE"

(ii) When $"\left(\frac{L}{r_x}, ">", 80\right) = "51.23 \le 80 \;\therefore\; !!FAIL!!"$:

$(KL/r)_{(E5\text{-}2)} := \min\left(32 + 1.25 \cdot \frac{L}{r_x}, 200\right) = 96.04$ ..... (E5-2)

$USE_{(E5\text{-}2)} := \frac{L}{r_x} > 80 = 0$ ..... → "FALSE"

$(KL/r)_{(E5\text{-}a)} := (KL/r)_{(E5\text{-}1)} \cdot USE_{(E5\text{-}1)} + (KL/r)_{(E5\text{-}2)} \cdot USE_{(E5\text{-}2)} = 110.42$ .....(K*L/r) After Modification #1

For unequal-leg angles with leg length ratios less than 1.7 $"(b_l \div b_s, "<", 1.7) = "1 \le 1.7 \;\therefore\; PASS"$ **and connected through the shorter leg, KL/r from Equations E5-1 and E5-2 shall be increased by adding** $4 \cdot \left[\left(b_l \div b_s\right)^2 - 1\right] = 0$ **, but KL/r of the members shall not be less than** $0.95 \cdot L \div r_z = 76.61$ **.**

$(KL/r)_{(E5\text{-}a)'} := \max\left[(KL/r)_{(E5\text{-}a)} + \left[\left(\frac{b_l}{b_s} < 1.7\right) \wedge (Connection = "SHORT")\right] \cdot \left[4 \cdot \left[\left(\frac{b_l}{b_s}\right)^2 - 1\right]\right], \frac{0.95 \cdot L}{r_z}\right] = 110.42$ .....(K*L/r) After Modification #2

$USE_{(KL/r).(E5\text{-}a)} := E5\text{-}Section = "a" = 0$ ..... → "FALSE"

(b) For equal-leg angles or unequal-leg angles connected through the longer leg that are web members of box or space trusses with adjacent web members attached to the same side of the gusset plat or chord:

(i) When $"\left(\frac{L}{r_x}, "<", 75\right) = "51.23 \le 75 \;\therefore\; PASS"$:

$(KL/r)_{(E5\text{-}3)} := 60 + 0.8 \cdot \frac{L}{r_x} = 100.98$ ..... (E5-3)

$USE_{(E5\text{-}3)} := \frac{L}{r_x} \le 80 = 1$ ..... → "TRUE"

(ii) When $\text{"}\left(\frac{L}{r_x}, \text{">"}, 75\right) = \text{"51.23} \le 75 \;\therefore\; \text{!!FAIL!!"}$:

$(KL/r)_{(E5\text{-}4)} := \min\left(45 + \frac{L}{r_x}, 200\right) = 96.23$ ..... (E5-4)

$USE_{(E5\text{-}4)} := \frac{L}{r_x} > 80 = 0$ ..... → "FALSE"

$(KL/r)_{(E5\text{-}b)} := (KL/r)_{(E5\text{-}3)} \cdot USE_{(E5\text{-}3)} + (KL/r)_{(E5\text{-}4)} \cdot USE_{(E5\text{-}4)} = 100.98$ .....(K*L/r) After Modification #1

For unequal-leg angles with leg length ratios less than 1.7 ($\text{"}(b_l \div b_s, \text{"<"}, 1.7) = \text{"1} \le 1.7 \;\therefore\; \text{PASS"}$ **) and connected through the shorter leg, KL/r from Equations E5-3 and E5-4 shall be increased by adding** $6 \cdot \left[\left(b_l \div b_s\right)^2 - 1\right] = 0$ **, but KL/r of the members shall not be less than** $0.82 \cdot L \div r_z = 66.13$ **.**

$(KL/r)_{(E5\text{-}b)'} := \max\left[(KL/r)_{(E5\text{-}b)} + \left[\left(\frac{b_l}{b_s} < 1.7\right) \wedge (\text{Connection} = \text{"SHORT"})\right] \cdot \left[6 \cdot \left[\left(\frac{b_l}{b_s}\right)^2 - 1\right]\right], \frac{0.82 \cdot L}{r_z}\right] = 100.98$ .....(K*L/r) After Modification #2

$USE_{(KL/r).(E5\text{-}b)} := \text{E5-Section} = \text{"b"} = 1$ ..... → "TRUE"

Thus:

$(KL/r)_{(E5)} := USE_{(KL/r).(E5\text{-}a)} \cdot (KL/r)_{(E5\text{-}a)'} + USE_{(KL/r).(E5\text{-}b)} \cdot (KL/r)_{(E5\text{-}b)'} = 100.98$ .....(K*L/r) After Section E5

$(KL/r)_{(E5)} = 100.98$

$KL/r := (KL/r)_{(E5)} \cdot (\text{Connection} = \text{"SHORT"} \vee \text{Connection} = \text{"LONG"}) + (KL/r) \cdot (\text{Connection} = \text{"CENTRE"}) = 100.98$ Slenderness Ratio

$b := \max(b_s, b_l) = 1.5\,\text{in}$

$t = 0.1\,\text{in}$

$USE_{(Section\text{-}E3)} := \text{"}\left(\frac{b}{t}, \text{"<"}, 0.45 \cdot \sqrt{\frac{E}{F_y}}\right) = \text{"14.71} \ge 13.99 \;\therefore\; \text{!!FAIL!!"}$ W/O SLENDER ELEMENTS (Flexural Buckling)

$USE_{(Section\text{-}E4)} := \text{"}\left(\frac{b}{t}, \text{">"}, 20\right) = \text{"14.71} \le 20 \;\therefore\; \text{!!FAIL!!"}$ W/O SLENDER ELEMENTS (Torsional Buckling) *(per 14th Edition)*

$USE_{(Section\text{-}E7)} := \text{"}\left(\frac{b}{t}, \text{">"}, 0.45 \cdot \sqrt{\frac{E}{F_y}}\right) = \text{"14.71} \ge 13.99 \;\therefore\; \text{PASS"}$ SLENDER ELEMENTS

E3, FLEXURAL BUCKLING OF MEMBERS WITHOUT SLENDER ELEMENTS

This section applies to compression members with compact and noncompact sections, as defined in Section B4, for uniformly compressed elements

Given:

$F_{e(E3\text{-}4)} := \frac{\pi^2 \cdot E}{KL/r^2} = 28066.65\,\text{psi}$ ..... *Elastic critical buckling stress* ..... (E3-4)

Then:

(a) When $\text{"}\left(KL/r, \text{"<"}, 4.71 \cdot \sqrt{\frac{E}{F_y}}\right) = \text{"100.98} \le 146.44 \;\therefore\; \text{PASS"}$

$F_{cr(E3\text{-}2)} := \left[0.658^{\left(F_y \div F_{e(E3\text{-}4)}\right)}\right] \cdot F_y = 19178.99\,\text{psi}$ ..... (E3-2)

$USE_{(E3\text{-}2)} := (KL/r) \le 4.71 \cdot \sqrt{\frac{E}{F_y}} = 1$ ..... → "TRUE"

(b) When $\text{"}\left(KL/r\text{ ,">" ,}4.71\cdot\sqrt{\frac{E}{F_y}}\right) = \text{"100.98} \le 146.44 \quad \therefore \text{ !!FAIL!!"}$

$F_{cr(E3\text{-}3)} := 0.877\cdot F_{e(E3\text{-}4)} = 24614.46\,psi$ ..... (E3-3)

$USE_{(E3\text{-}3)} := KL/r > 4.71\cdot\sqrt{\frac{E}{F_y}} = 0$ ..... → "FALSE"

Therefore:

$F_{cr(E3\text{-}1)} := USE_{(E3\text{-}2)}\cdot F_{cr(E3\text{-}2)} + USE_{(E3\text{-}3)}\cdot F_{cr(E3\text{-}3)} = 19178.99\,psi$ .....Flexural Buckling Stress

Thus:

The *nominal compressive strength*, P_n, shall be determined based on the *limit state* of *flexural buckling*

$P_{n(E3\text{-}1)} := F_{cr(E3\text{-}1)}\cdot A_g = 5669.23\,lbf$ ..... (E3-1)

$USE_{(Section\text{-}E3)} = 0$ ..... → "FALSE"

$USE_{(Section\text{-}E3)}\cdot P_{n(E3\text{-}1)} = 0$

E4, TORSIONAL AND FLEXURAL-TORSIONAL BUCKLING OF MEMBERS WITHOUT SLENDER ELEMENTS

This section applies to singly symmetric and unsymmetric members, and certain doubly symmetric members, such as cruciform or built-up columns with compact and non-compact sections, as defined in Section B4 for uniformly compressed elements. These provisions are required for single angles with b/t > 20 (per 14th Edition)

Given:

$\left[\left(\overline{r_o}\right)^2\right] := x_o^2 + y_o^2 + \frac{I_x + I_y}{A_g} = 0.7\,in^2$ ..... (E4-7)

$H := 1 - \frac{x_o^2 + y_o^2}{\left[\left(\overline{r_o}\right)^2\right]} = 0.63$ ..... (E4-8)

$F_{ex} := \frac{\pi^2\cdot E}{\left(KL/r\cdot\frac{r}{r_x}\right)^2} = 69548.7\,psi$ ..... (E4-9)

$F_{ey} := \frac{\pi^2\cdot E}{\left(KL/r\cdot\frac{r}{r_y}\right)^2} = 69548.7\,psi$ ..... (E4-10)

$F_{ez} := \left[\frac{\pi^2\cdot E\cdot C_w}{[(KL/r)\cdot(r)]^2} + G\cdot J\right]\cdot\frac{1}{A_g\cdot\left[\left(\overline{r_o}\right)^2\right]} = 55711.42\,psi$ ..... (E4-11)

Then:

(b) For all other cases, F_{cr} shall be determined according to Equation E3-2 or E3-3, using the torsional or flexural-torsional elastic buckling stress, F_e, determined as follows:

(iii) For unsymmetric, F_e *is the lowest root of the cubic equation:*

$$\left[\overline{r_o}\right] := \sqrt{\left[\left(\overline{r_o}\right)^2\right]} = 0.84\,\text{in}$$

$$(E4\text{-}6)(F_e) := \left(F_e - \frac{F_{ex}}{psi}\right)\cdot\left(F_e - \frac{F_{ey}}{psi}\right)\cdot\left(F_e - \frac{F_{ez}}{psi}\right) - F_e^2\cdot\left(F_e - \frac{F_{ey}}{psi}\right)\cdot\left[\frac{x_o^2}{\left[\left(\overline{r_o}\right)^2\right]}\right] - F_e^2\cdot\left(F_e - \frac{F_{ex}}{psi}\right)\cdot\left[\frac{y_o^2}{\left[\left(\overline{r_o}\right)^2\right]}\right] \quad \text{..... (E4-6)}$$

$$C_{(E4\text{-}6)} := (E4\text{-}6)(_x)\ \text{coeffs}, _x \rightarrow \begin{pmatrix} -2.69\times10^{14} \\ 1.26\times10^{10} \\ -168806.95 \\ 0.63 \end{pmatrix} \qquad \text{polyroots}\left(C_{(E4\text{-}6)}\right) = \begin{pmatrix} 38243.94 \\ 69548.7 \\ 161809.2 \end{pmatrix}$$

$$F_{e(E4\text{-}b)} := psi\cdot\min\left(\text{polyroots}\left(C_{(E4\text{-}6)}\right)\right) = 38243.94\,psi$$

E3(a) When $\text{"}\left(KL/r, \text{"<"}, 4.71\cdot\sqrt{\frac{E}{F_y}}\right) = \text{"100.98} \le 146.44\ \therefore \text{PASS"}$

$$F_{cr.(E4\text{-}b).(E3\text{-}2)} := \left[0.658^{\left(F_y \div F_{e(E4\text{-}b)}\right)}\right]\cdot F_y = 21603.83\,psi \quad \text{..... (E3-2)}$$

$$USE_{(E4\text{-}b).(E3\text{-}2)} := (KL/r) \le 4.71\cdot\sqrt{\frac{E}{F_y}} = 1 \quad \text{..... } \rightarrow \text{"TRUE"}$$

E3(b) When $\text{"}\left(KL/r, \text{">"}, 4.71\cdot\sqrt{\frac{E}{F_y}}\right) = \text{"100.98} \le 146.44\ \therefore \text{!!FAIL!!"}$

$$F_{cr.(E4\text{-}b).(E3\text{-}3)} := 0.877\cdot F_{e(E4\text{-}b)} = 33539.93\,psi \quad \text{..... (E3-3)}$$

$$USE_{(E4\text{-}b).(E3\text{-}3)} := KL/r > 4.71\cdot\sqrt{\frac{E}{F_y}} = 0 \quad \text{..... } \rightarrow \text{"FALSE"}$$

Therefore:

$$F_{cr.(E4\text{-}b)} := USE_{(E4\text{-}b).(E3\text{-}2)}\cdot F_{cr.(E4\text{-}b).(E3\text{-}2)} + USE_{(E4\text{-}b).(E3\text{-}3)}\cdot F_{cr.(E4\text{-}b).(E3\text{-}3)} = 21603.83\,psi \quad \text{.....Flexural Buckling Stress}$$

Thus:

The *nominal compressive strength*, P_n, shall be determined based on the *limit states* of *flexural-torsional and torsional buckling, as follows:*

$$P_{n(E4\text{-}1)} := F_{cr.(E4\text{-}b)}\cdot A_g = 6386.01\,lbf \quad \text{..... (E4-1)}$$

$$USE_{(Section\text{-}E4)} = 0 \quad \text{..... } \rightarrow \text{"FALSE"}$$

$$USE_{(Section\text{-}E4)}\cdot P_{n(E4\text{-}1)} = 0$$

E7, MEMBERS WITH SLENDER ELEMENTS

This section applies to compression members with slender sections, as defined in Section B4 for uniformly compressed elements.

1.) Slender Unstiffened Elements, Q_s

(c) For single angles

(i) When $\text{"}\left(\frac{b}{t}, \text{"<"}, 0.45\cdot\sqrt{\frac{E}{F_y}}\right) = \text{"14.71} \ge 13.99\ \therefore \text{!!FAIL!!"}$

$$Q_{s(E7\text{-}10)} := 1.0 = 1 \quad \text{..... (E7-10)}$$

$$USE_{(E7\text{-}10)} := \frac{b}{t} \le 0.45\cdot\sqrt{\frac{E}{F_y}} = 0 \quad \text{..... } \rightarrow \text{"FALSE"}$$

(ii) When $"\left(\frac{b}{t},">",0.45\cdot\sqrt{\frac{E}{F_y}}\right) = "14.71 \geq 13.99 \;\therefore\; PASS"$ AND $"\left(\frac{b}{t},"<",0.91\cdot\sqrt{\frac{E}{F_y}}\right) = "14.71 \leq 28.29 \;\therefore\; PASS"$

$Q_{s(E7\text{-}11)} := 1.34 - 0.76\cdot\left(\frac{b}{t}\right)\cdot\sqrt{\frac{F_y}{E}} = 0.98$ ..... (E7-11)

$USE_{(E7\text{-}11)} := \frac{b}{t} > 0.45\cdot\sqrt{\frac{E}{F_y}} \wedge \frac{b}{t} < 0.91\cdot\sqrt{\frac{E}{F_y}} = 1$ ..... → "TRUE"

(iii) When $"\left(\frac{b}{t},">",0.91\cdot\sqrt{\frac{E}{F_y}}\right) = "14.71 \leq 28.29 \;\therefore\; !!FAIL!!"$

$Q_{s(E7\text{-}12)} := \frac{0.53\cdot E}{F_y\cdot\left(\frac{b}{t}\right)^2} = 2.37$ ..... (E7-12)

$USE_{(E7\text{-}12)} := \frac{b}{t} \geq 0.91\cdot\sqrt{\frac{E}{F_y}} = 0$ ..... → "FALSE"

Therefore:

$Q_{s.(1c)} := Q_{s(E7\text{-}10)}\cdot USE_{(E7\text{-}10)} + Q_{s(E7\text{-}11)}\cdot USE_{(E7\text{-}11)} + Q_{s(E7\text{-}12)}\cdot USE_{(E7\text{-}12)} = 0.98$ .....Reduction Factor For Unstiffened Elements

Thus:

$Q_s := Q_{s.(1c)} = 0.98$ .....Slender Unstiffened Elements

$Q := Q_s = 0.98$ ..... **User Note**: For cross sections composed of only unstiffened slender elements; Q = Qs

Proceeding With:

$F_{e(E7)} := F_{e(E3\text{-}4)} = 28066.65\,psi$

$Q = 0.98$

Then:

(a) When $"\left(KL/r,"<",4.71\cdot\sqrt{\frac{E}{Q\cdot F_y}}\right) = "100.98 \leq 147.89 \;\therefore\; PASS"$ **:**

$F_{cr(E7\text{-}2)} := Q\cdot\left[0.658^{\left[(Q\cdot F_y)\div F_{e(E7)}\right]}\right]\cdot F_y = 18970.07\,psi$ ..... (E7-2)

$USE_{(E7\text{-}2)} := KL/r \leq 4.71\cdot\sqrt{\frac{E}{Q\cdot F_y}} = 1$ ..... → "TRUE"

(b) When $"\left(KL/r,">",4.71\cdot\sqrt{\frac{E}{Q\cdot F_y}}\right) = "100.98 \leq 147.89 \;\therefore\; !!FAIL!!"$ **:**

$F_{cr(E7\text{-}3)} := 0.877\cdot F_{e(E7)} = 24614.46\,psi$ ..... (E7-3)

$USE_{(E7\text{-}3)} := KL/r > 4.71\cdot\sqrt{\frac{E}{Q\cdot F_y}} = 0$ ..... → "FALSE"

Therefore:

$F_{cr.(E7)} := USE_{(E7\text{-}2)}\cdot F_{cr(E7\text{-}2)} + USE_{(E7\text{-}3)}\cdot F_{cr(E7\text{-}3)} = 18970.07\,psi$ .....Flexural Buckling Stress

Thus:

The *nominal compressive strength*, P_n, shall be determined based on the *limit states* of *flexural, torsional*, & *flexural-torsional buckling:*

$P_{n(E7\text{-}1)} := F_{cr.(E7)}\cdot A_g = 5607.48\,lbf$ ..... (E7-1)

$USE_{(Section\text{-}E7)} = 1$ ..... → "FALSE"

$USE_{(Section\text{-}E7)}\cdot P_{n(E7\text{-}1)} = 5607.48\,lbf$

AISC 360-10 - CHAPTER E

Corner of Curb in Compression	Detail Ref.	Sheet No: 01 F

E1, GENERAL PROVISIONS

$\Omega_c \equiv 1.67$ ..... ASD

$\phi_c \equiv 0.90$ ..... LRFD

TABLE B4.1a; Width-to-Thickness Ratios: Compression Elements Members Subject to Axial Compression

Case	Description of Element	Width-to-Thickness Ratio	Limiting Width-to-Thickness Ratio λ_r (nonslender/slender)	Examples
3	Legs of single angles, legs of double angles with separators, and all other unstiffened elements	b/t $b \div t = 14.71$	$0.45\sqrt{\frac{E}{F_y}}$ $0.45 \cdot \sqrt{E \div F_y} = 13.99$	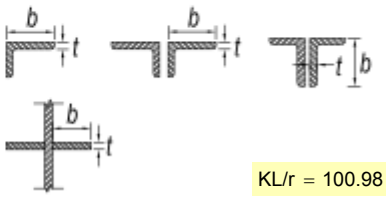 $KL/r = 100.98$

E3, FLEXURAL BUCKLING OF MEMBERS WITHOUT SLENDER ELEMENTS

$P_{n(E3\text{-}1)} = 5669.23\,lbf$

$bool(USE_{(Section\text{-}E3)}) = \text{"FALSE"}$

$USE_{(Section\text{-}E3)} \cdot P_{n(E3\text{-}1)} = 0$

$\text{"}\left(\frac{b}{t}, \text{"<"}, 0.45 \cdot \sqrt{\frac{E}{F_y}}\right) = \text{"}14.71 \geq 13.99 \;\therefore\; \text{!!FAIL!!"}$

E4, TORSIONAL AND FLEXURAL-TORSIONAL BUCKLING OF MEMBERS WITHOUT SLENDER ELEMENTS

$P_{n(E4\text{-}1)} = 6386.01\,lbf$

$bool(USE_{(Section\text{-}E4)}) = \text{"FALSE"}$

$USE_{(Section\text{-}E4)} \cdot P_{n(E4\text{-}1)} = 0$

$\text{"}(b \div t, \text{">"}, 20) = \text{"}14.71 \leq 20 \;\therefore\; \text{!!FAIL!!"}$

E7, MEMBERS WITH SLENDER ELEMENTS

$P_{n(E7\text{-}1)} = 5607.48\,lbf$

$bool(USE_{(Section\text{-}E7)}) = \text{"TRUE"}$

$USE_{(Section\text{-}E7)} \cdot P_{n(E7\text{-}1)} = 5607.48\,lbf$

$\text{"}\left(\frac{b}{t}, \text{">"}, 0.45 \cdot \sqrt{\frac{E}{F_y}}\right) = \text{"}14.71 \geq 13.99 \;\therefore\; \text{PASS"}$

The nominal compressive strength, P.n, shall be the lowest vaue obtained based on the applicable limit states of flexural buckling, torsional buckling, and flexural-torsional buckling.

$$P_n := \text{minPositiveNotZero}\left[\begin{pmatrix} USE_{(Section\text{-}E3)} \cdot P_{n(E3\text{-}1)} \\ USE_{(Section\text{-}E4)} \cdot P_{n(E4\text{-}1)} \\ USE_{(Section\text{-}E7)} \cdot P_{n(E7\text{-}1)} \end{pmatrix} \div lbf\right] \cdot lbf = 5607.48\,lbf$$ ..... *Nominal Compressive Strength*

$P_{n*\phi.c} := \phi_c \cdot P_n = 5046.73\,lbf$ ..... *Design Compressive Strength*

$P_{n/\Omega.c} := P_n \div \Omega_c = 3357.77\,lbf$ ..... *Allowable Compressive Strength*

24in Tall Curb	Detail Ref.	Sheet No: 01.G

INPUTS:

$b \equiv 1 \cdot in$

$t \equiv 0.102 \cdot in$

$K \equiv 0.8$ Effective length factor for torsional buckling

$L \equiv 24 \cdot in$ Length of Column

$E \equiv 29000 \cdot ksi$

$F_y \equiv 33 \cdot ksi$

E2, EFFECTIVE LENGTH

$A_g := b \cdot t = 0.102 \cdot in^2$ Gross Area of Member

$I_y := b \cdot t^3 \div 12 = 0.000088\,in^4$

$r_y := \sqrt{I_y \div A_g} = 0.03\,in$

$KL/r := (K \cdot L) \div r_y = 652.07$

E3, FLEXURAL BUCKLING OF MEMBERS WITHOUT SLENDER ELEMENTS

This section applies to compression members with compact and noncompact sections, as defined in Section B4, for uniformly compressed elements

Given:

$F_{e(E3\text{-}4)} := \dfrac{\pi^2 \cdot E}{KL/r^2} = 673.15\,psi$ *Elastic critical buckling stress* ..... (E3-4)

Then:

(a) When $"\left(KL/r, "<", 4.71 \cdot \sqrt{\dfrac{E}{F_y}}\right) = "652.07 \geq 139.62 \;\therefore\; !!FAIL!!"$

$F_{cr(E3\text{-}2)} := \left[0.658^{\left(F_y \div F_{e(E3\text{-}4)}\right)}\right] \cdot F_y = 0\,psi$ ..... (E3-2)

$USE_{(E3\text{-}2)} := (KL/r) \leq 4.71 \cdot \sqrt{\dfrac{E}{F_y}} = 0$ ..... $\rightarrow$ "FALSE"

(b) When $"\left(KL/r, ">", 4.71 \cdot \sqrt{\dfrac{E}{F_y}}\right) = "652.07 \geq 139.62 \;\therefore\; PASS"$

$F_{cr(E3\text{-}3)} := 0.877 \cdot F_{e(E3\text{-}4)} = 590.36\,psi$ ..... (E3-3)

$USE_{(E3\text{-}3)} := KL/r > 4.71 \cdot \sqrt{\dfrac{E}{F_y}} = 1$ ..... $\rightarrow$ "TRUE"

Therefore:

$F_{cr(E3\text{-}1)} := USE_{(E3\text{-}2)} \cdot F_{cr(E3\text{-}2)} + USE_{(E3\text{-}3)} \cdot F_{cr(E3\text{-}3)} = 590.36\,psi$ .....Flexural Buckling Stress

Thus:

The *nominal compressive strength*, P_n, shall be determined based on the *limit state* of *flexural buckling*

$P_{n(E3\text{-}1)} := F_{cr(E3\text{-}1)} \cdot A_g = 60.22\,lbf$ ..... (E3-1)

E1, GENERAL PROVISIONS

$\Omega_c \equiv 1.67$ ..... ASD

$\phi_c \equiv 0.90$ ..... LRFD

$P_n := P_{n(E3\text{-}1)} = 60.22\,lbf$ ..... *Nominal Compressive Strength*

$P_{n*\phi.c} := \phi_c \cdot P_n = 54.19\,lbf$ ..... *Design Compressive Strength*

$P_{n/\Omega.c} := P_n \div \Omega_c = 36.06\,lbf \cdot / inch$ ..... *Allowable Compressive Strength*

Single Blower	Detail Ref.	Sheet No: 02

Inputs:

Seismic Parameters

$F_{ph.max} \equiv 1.59 \cdot g$ Maximum Lateral Seismic

$F_{pv.max} \equiv 1.32 \cdot g$ Maximum Vertical Seismic (with DL)

$F_{pv.min} \equiv 0.28 \cdot g$ Minimum Vertical Seismic (with DL)

Washer Parameters

$t_{plate} \equiv 0.250 \cdot in$

$L_{plate} \equiv 2 \cdot in$

$F_y \equiv 33 \cdot ksi$

Anchor Parameters

$dia \equiv 0.500 \cdot in$

ANCHORAGE ≡

"Substrate"	"Tension [lbf]"	"Shear [lbf]"
"Concrete [1/2" Kwik Bolt TZ]"	731	179
"Steel Deck [1/2" Thru Bolt]"	5000	1400
"Wood Deck [1/2" Zinc Lag]"	980	120

Curb Dimensions

$H_{max} \equiv 24 \cdot in$ Max Height of Curb

$t_{curb} \equiv 0.102 \cdot in$ Thickness of Curb

CURBS ≡

"UNIT"	"A (in)"	"B (in)"	"wt (lbf)"
"15"	67.25	43.25	997
"20"	77	55	2053
"25"	95	74	2398
"30"	95	83	3670
"36"	107	93	4450

Curb Performance

$P_{n/\Omega.c} \equiv 3357.77 \cdot lbf$ Allowable Compressive Strength on Corner of Curb (per Sht 01.F)

$P_{n/\Omega.c_24in} \equiv 36.06 \cdot pli$ Allowable Compressive Strength Along Length of Curb (per Sht 01.G)

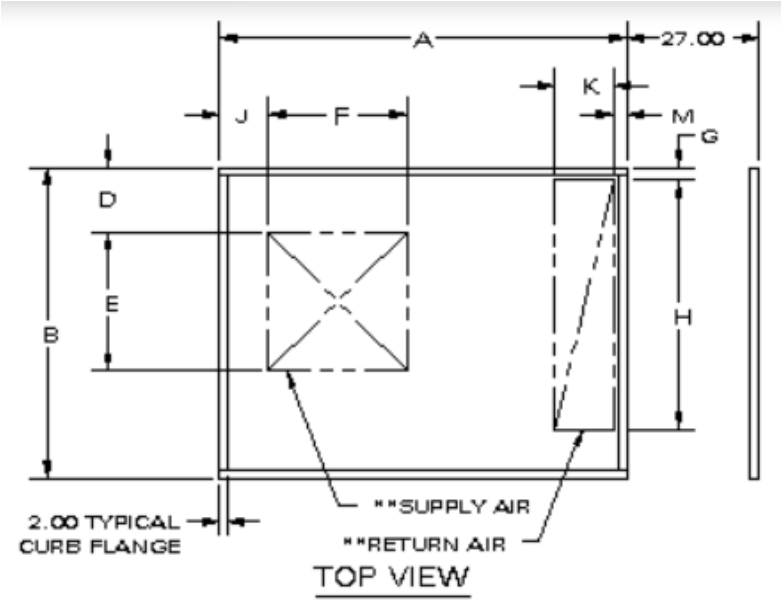

Curbs are built in the following way.

- Metal is 0.102" Aluminized Sheet Metal
- All seams are welded.
- Top flange is 2.00" wide.
- Bottom flange is 2.00" wide
- Yield Strength = 33 ksi or Better

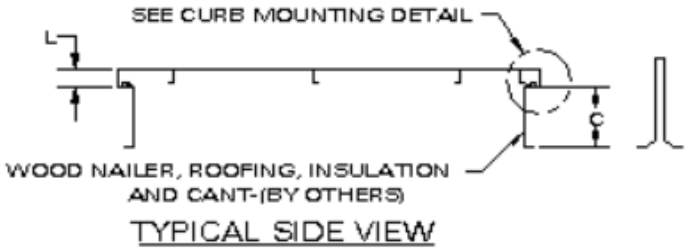

RICE ENGINEERING	105 School Creek Trail Luxemburg, WI 54217 Phone: (920) 617-1042 Fax: (920) 617-1100 www.rice-inc.com	Project Description:	Job No:	R16-06-271	
		- Captiveaire -	Engineer:	KML	Sheet No: 02
		Seismic Curb Analysis	Date:	9/9/16	Rev:
Template:			Chk By:		Date:

$S_{wk.plate} := L_{plate} \cdot t_{plate}^{2} \div 6 = 0.02\,in^{3}$

$F_{b_wk} := 0.75 \cdot F_y = 24750\,psi$

$M_{max} := S_{wk.plate} \cdot F_{b_wk} = 515.63\,in \cdot lbf$

$P_{max.plate} := M_{max} \div (0.5 \cdot L_{plate}) = 515.63\,lbf$

$P_b := 0.9 \cdot F_y \cdot t_{curb} \cdot dia = 1514.7\,lbf$ Allowable Bearing Force

```
M := | FANS' ← ("Overturning (lbf*in)" "max DL (lb)" "x1 (in)" "y1 (in)" "V.tot (lbf)" "T.tot (lbf) (B)" "# pl. (B)" "T.tot (lbf) (A)" "# pl. (A)" )
     for i ∈ 1 .. rows(CURBS) − 1
       | W ← CURBS_{i,A} · in
       | L ← CURBS_{i,B} · in
       | P_{c.max} ← P_{n/Ω.c} · [(2) · Sides] + (P_{n/Ω.c_24in}) · (min(W, L) − 3 · in)
       | y_1 ← min(W, L) + H_{max}
       | width1 ← W
       | x_1 ← 0.5 · width1
       | DL ← min[ (P_{c.max} · width1) / (F_{ph.max} · y_1 − F_{pv.min} · x_1) , (P_{n/Ω.c} · (4 · Corners)) / F_{pv.max} , CURBS_{i,Weight} · lbm ]
       | FANS'_{i,0} ← (F_{ph.max} · DL · y_1 − F_{pv.min} · DL · x_1) ÷ (lbf · in)
       | FANS'_{i,1} ← DL ÷ lbm
       | FANS'_{i,2} ← x_1 ÷ in
       | FANS'_{i,3} ← y_1 ÷ in
       | FANS'_{i,4} ← DL · F_{ph.max} ÷ lbf
       | FANS'_{i,5} ← P_{c.max} ÷ lbf
       | T_{pry1} ← FANS'_{i,5} · [[[0.5 · L_{plate} + 0.85 · (0.5 · L_{plate})] ÷ [0.85 · (0.5 · L_{plate})]]]
       | FANS'_{i,6} ← max(ceil(P_{c.max} ÷ P_{max.plate}), ceil(T_{pry1} ÷ min('mid(ANCHORAGE, 1))))
       | width2 ← L
       | x_2 ← 0.5 · width2
       | FANS'_{i,7} ← DL · (F_{ph.max} · y_1 − F_{pv.min} · x_2) ÷ (width2 · lbf)
       | T_{pry2} ← FANS'_{i,7} · [[[0.5 · L_{plate} + 0.85 · (0.5 · L_{plate})] ÷ [0.85 · (0.5 · L_{plate})]]]
       | FANS'_{i,8} ← max(ceil(P_{c.max} ÷ P_{max.plate}), ceil(T_{pry2} ÷ min('mid(ANCHORAGE, 1))))
     return augment(CURBS^{⟨0⟩}, FANS')
```

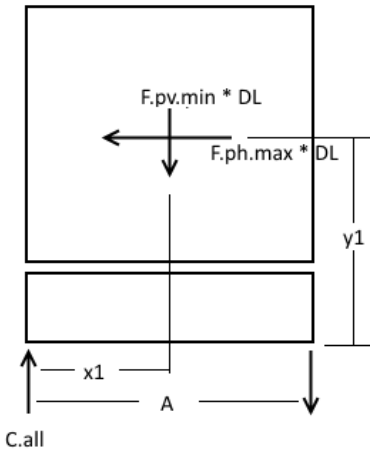

M =

"UNIT"	"Overturning (lbf*in)"	"max DL (lb)"	"x1 (in)"	"y1 (in)"	"V.tot (lbf)"	"T.tot (lbf) (B)"	"# pl. (B)"	"T.tot (lbf) (A)"	"# pl. (A)"
"15"	97219.96	997	33.63	67.25	1585.23	8166.95	25	2325.32	16
"20"	235745.99	2053	38.5	79	3264.27	8590.66	26	4401.26	17
"25"	341762.96	2398	47.5	98	3812.82	9275.8	28	4713.69	18
"30"	575566.1	3670	47.5	107	5835.3	9600.34	29	7008.82	21
"36"	761172.5	4450	53.5	117	7075.5	9960.94	30	8278.44	25

Single Blower	Detail Ref.	Sheet No: 02 B

"UNIT"	"A (in)"	"B (in)"	"wt (lbf)"	"max DL (lb)"	---------- Fasteners ---------- "Side (A)"	"Side (B)"	"Total"
"15"	67.25	43.25	997	997	16	25	82
"20"	77	55	2053	2053	17	26	86
"25"	95	74	2398	2398	18	28	92
"30"	95	83	3670	3670	21	29	100
"36"	107	93	4450	4450	25	30	110

GENERIC DRAWING - NOT TO SCALE

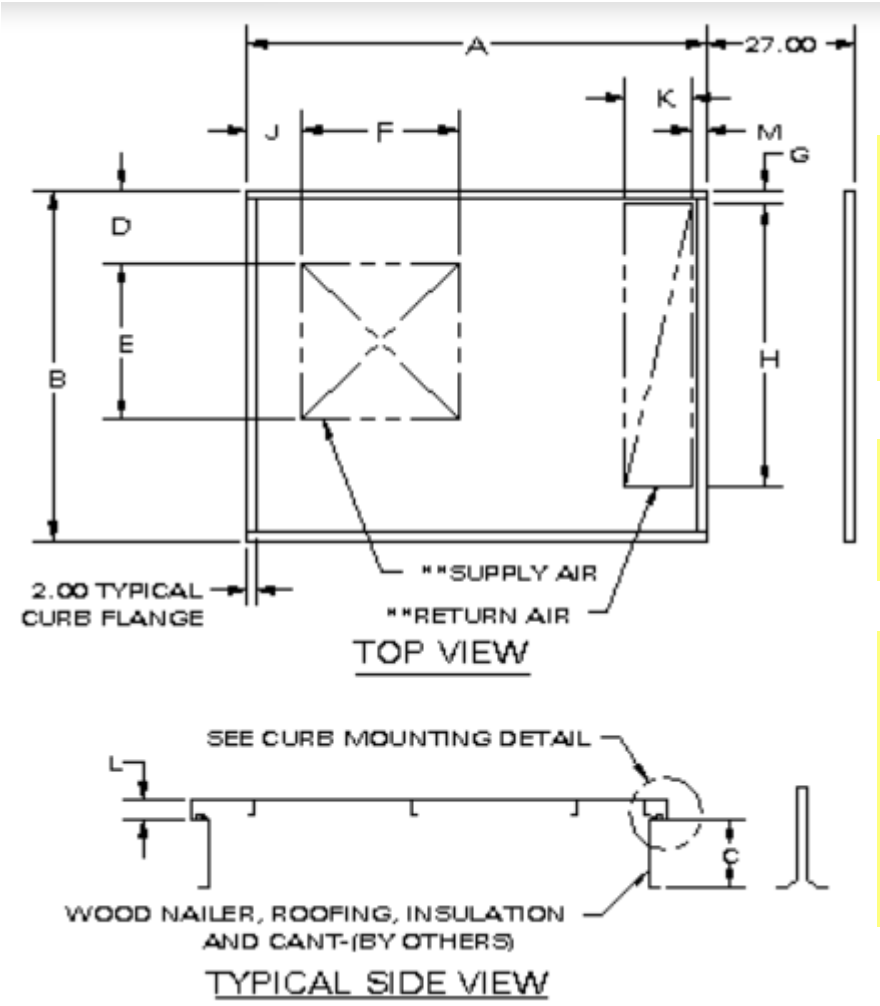

~ WOOD ~

Use 1/2" Dia, S.S Lag Bolts as Shown

Minimum Fastener Yield Strength; Fy = 45,000 psi
Substrate: SPF (G = 0.42 MIN)
Min. Penetration = 2.44" MIN [Predrill Holes]
Min. Thread Engagement = 1.75" MIN
Spacing = 4" MIN
Edge Distance = 2" MIN
End Distance = 2" MIN

~ STEEL ~

Use 1/2" Dia, S.S. Fasteners as Shown

300 Series, Cond. CW; Fy = 65 ksi
Substrate: MIN Fy = 36 ksi
Min Thread Engagement = 0.375"

~ CONCRETE ~

Use 1/2" Dia, 316 S.S. Kwik Bolt TZ Wedge Anchors As Shown

Minimum 6" Thick, Normal Wt. Cracked Concrete Slab
Compressive Strength: f`c = 3,000 psi MIN.
12" Edge Distance MIN
6" Spacing MIN
Eff. Embedment = 3.250"
Install Depth = 3.625"
~ INSTALL PER MANUFACTURES RECOMMENDATIONS ~

RICE ENGINEERING Template:	105 School Creek Trail Luxemburg, WI 54217 Phone: (920) 617-1042 Fax: (920) 617-1100 www.rice-inc.com	Project Description: **- Captiveaire - Seismic Curb Analysis**	Job No: R16-06-271	
			Engineer: KML	Sheet No: 02 B
			Date: 9/9/16	Rev:
			Chk By:	Date:

Double Blower	Detail Ref.	Sheet No: 03

Inputs:

Seismic Parameters

$F_{ph.max} \equiv 1.59 \cdot g$ Maximum Lateral Seismic

$F_{pv.max} \equiv 1.32 \cdot g$ Maximum Vertical Seismic (with DL)

$F_{pv.min} \equiv 0.28 \cdot g$ Minimum Vertical Seismic (with DL)

Washer Parameters

$t_{plate} \equiv 0.250 \cdot in$

$L_{plate} \equiv 2 \cdot in$

$F_y \equiv 33 \cdot ksi$

Anchor Parameters

$dia \equiv 0.500 \cdot in$

ANCHORAGE ≡

"Substrate"	"Tension [lbf]"	"Shear [lbf]"
"Concrete [1/2" Kwik Bolt TZ]"	731	179
"Steel Deck [1/2" Thru Bolt]"	5000	1400
"Wood Deck [1/2" Zinc Lag]"	980	120

Curb Dimensions

$t_{curb} \equiv 0.102 \cdot in$ Thickness of Curb

CURBS ≡

"UNIT"	"A (in)"	"B (in)"	"C (in)"	"wt (lb)"
"225"	95	141	14	4298
"230"	95	151	14	4995
"236"	121	179	24	5600

where [C] is curb height

Curb Performance

$P_{n/\Omega.c} \equiv 3357.77 \cdot lbf$ Allowable Compressive Strength on Corner of Curb (per Sht 01.F)

$P_{n/\Omega.c_24in} \equiv 36.06 \cdot pli$ Allowable Compressive Strength Along Length of Curb (per Sht 01.G)

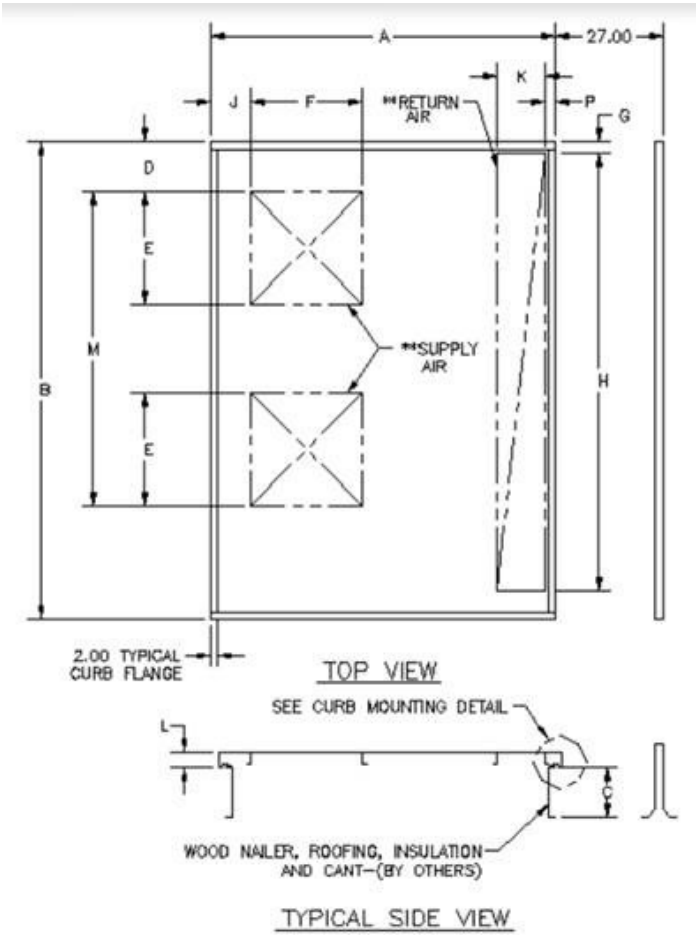

Curbs are built in the following way.

- Metal is 0.102" Aluminized Sheet Metal
- All seams are welded.
- Top flange is 2.00" wide.
- Bottom flange is 2.00" wide
- Yield Strength = 33 ksi or Better

RICE ENGINEERING	105 School Creek Trail Luxemburg, WI 54217 Phone: (920) 617-1042 Fax: (920) 617-1100 www.rice-inc.com	Project Description:	Job No:	R16-06-271	
		- Captiveaire - Seismic Curb Analysis	Engineer:	KML	Sheet No: 03
			Date:	9/9/16	Rev:
Template:			Chk By:		Date:

$S_{wk.plate} := L_{plate} \cdot t_{plate}^2 \div 6 = 0.02\,in^3$

$F_{b_wk} := 0.75 \cdot F_y = 24750\,psi$

$M_{max} := S_{wk.plate} \cdot F_{b_wk} = 515.63\,in \cdot lbf$

$P_{max.plate} := M_{max} \div (0.5 \cdot L_{plate}) = 515.63\,lbf$

$P_b := 0.9 \cdot F_y \cdot t_{curb} \cdot dia = 1514.7\,lbf$ Allowable Bearing Force

```
M := | FANS' ← ("Overturning (lbf*in)"  "max DL (lb)"  "x1 (in)"  "y1 (in)"  "V.tot (lbf)"  "T.tot (lbf) (B)"  "# pl. (B)"  "T.tot (lbf) (A)"  "# pl. (A)" )
     | for i ∈ 1 .. rows(CURBS) − 1
     |   | W ← CURBS_{i,A}·in
     |   | L ← CURBS_{i,B}·in
     |   | H_max ← CURBS_{i,C}·in
     |   | P_c.max ← P_n/Ω.c ·[(2)·Sides] + (P_n/Ω.c_24in)·(min(W, L) − 03·in)
     |   | y1 ← min(W, L) + H_max
     |   | width1 ← W
     |   | x1 ← 0.5·width1
     |   | DL ← min[ (P_c.max·width1)/(F_ph.max·y1 − F_pv.min·x1) , (P_n/Ω.c ·(4·Corners))/F_pv.max , CURBS_{i,Weight}·lbm ]
     |   | FANS'_{i,0} ← (F_ph.max·DL·y1 − F_pv.min·DL·x1) ÷ (lbf·in)
     |   | FANS'_{i,1} ← DL ÷ lbm
     |   | FANS'_{i,2} ← x1 ÷ in
     |   | FANS'_{i,3} ← y1 ÷ in
     |   | FANS'_{i,4} ← DL·F_ph.max ÷ lbf
     |   | FANS'_{i,5} ← P_c.max ÷ lbf
     |   | T_pry1 ← FANS'_{i,5}·[[[0.5·L_plate + 0.85·(0.5·L_plate)] ÷ [0.85·(0.5·L_plate)]]]
     |   | FANS'_{i,6} ← max(ceil(P_c.max ÷ P_max.plate), ceil(T_pry1 ÷ min('mid(ANCHORAGE, 1))))
     |   | width2 ← L
     |   | x2 ← 0.5·width2
     |   | FANS'_{i,7} ← DL·(F_ph.max·y1 − F_pv.min·x2) ÷ (width2·lbf)
     |   | T_pry2 ← FANS'_{i,7}·[[[0.5·L_plate + 0.85·(0.5·L_plate)] ÷ [0.85·(0.5·L_plate)]]]
     |   | FANS'_{i,8} ← max(ceil(P_c.max ÷ P_max.plate), ceil(T_pry2 ÷ min('mid(ANCHORAGE, 1))))
     | return augment(CURBS⟨0⟩, FANS')
```

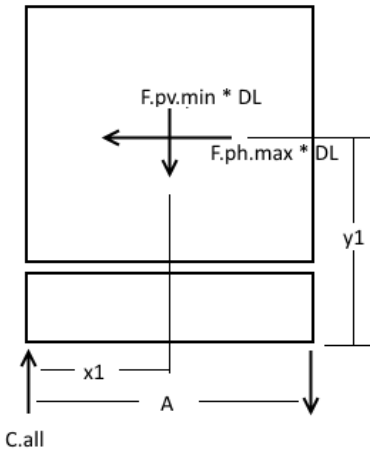

$M =$

"UNIT"	"Overturning (lbf*in)"	"max DL (lb)"	"x1 (in)"	"y1 (in)"	"V.tot (lbf)"	"T.tot (lbf) (B)"	"# pl. (B)"	"T.tot (lbf) (A)"	"# pl. (A)"
"225"	687722.98	4298	47.5	109	6833.82	10033.06	30	4681.16	20
"230"	799249.95	4995	47.5	109	7942.05	10033.06	30	5033.7	20
"236"	1196216	5600	60.5	145	8904	10970.62	33	6428.74	22

Double Blower	Detail Ref.	Sheet No: 03 B

"UNIT"	"A (in)"	"B (in)"	"C (in)"	"wt (lb)"	"max DL (lb)"	---------- Fasteners ---------- "Side (A)"	"Side (B)"	"Total"
"225"	95	141	14	4298	4298	20	30	100
"230"	95	151	14	4995	4995	20	30	100
"236"	121	179	24	5600	5600	22	33	110

GENERIC DRAWING - NOT TO SCALE

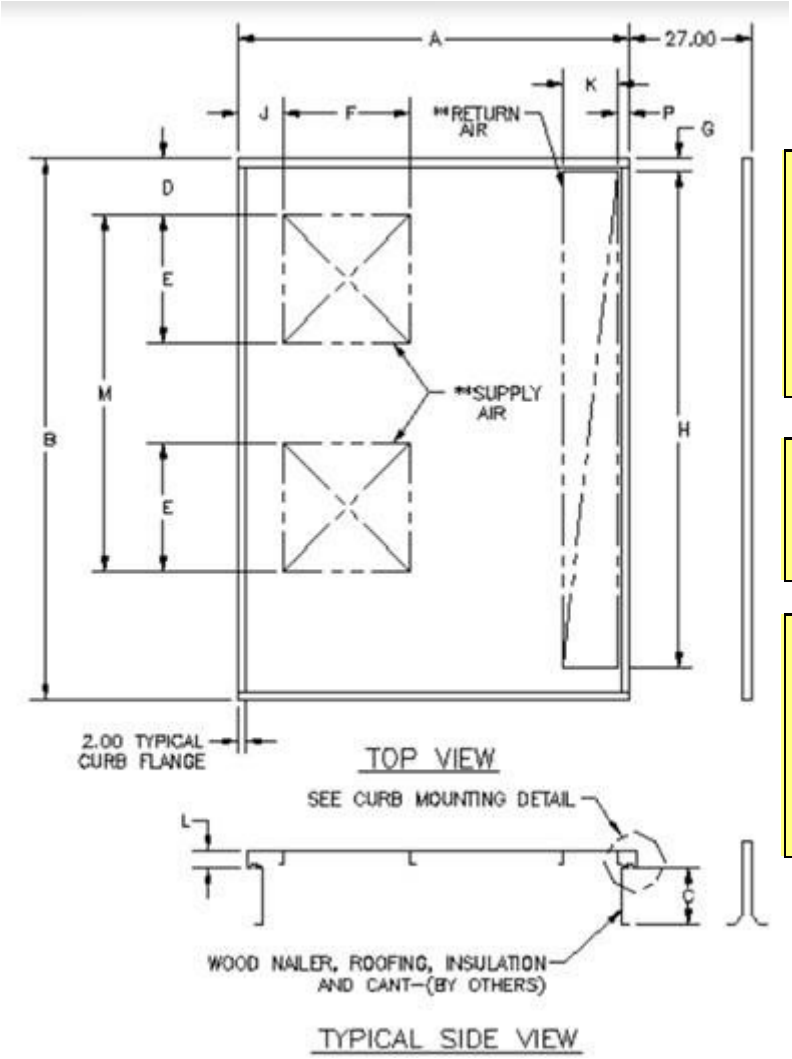

~ WOOD ~
Use 1/2" Dia, Zinc Lag Bolts as Shown
Minimum Fastener Yield Strength; Fy = 45,000 psi
Substrate: SPF (G = 0.42 MIN)
Min. Penetration = 2.44" MIN [Predrill Holes]
Min. Thread Engagement = 1.75" MIN
Spacing = 4" MIN
Edge Distance = 2" MIN
End Distance = 2" MIN

~ STEEL ~
Use 1/2" Dia, S.S. Fasteners as Shown
300 Series, Cond. CW; Fy = 65 ksi
Substrate: MIN Fy = 36 ksi
Min Thread Engagement = 0.375"

~ CONCRETE ~
Use 1/2" Dia, 316 S.S. Kwik Bolt TZ As Shown
Minimum 6" Thick, Normal Wt. Cracked Concrete Slab
Compressive Strength: f`c = 3,000 psi MIN.
12" Edge Distance MIN
6" Spacing MIN
Eff. Embedment = 3.250"
Install Depth = 3.625"
~ INSTALL PER MANUFACTURES RECOMMENDATIONS ~

RICE ENGINEERING Template:	105 School Creek Trail Luxemburg, WI 54217 Phone: (920) 617-1042 Fax: (920) 617-1100 www.rice-inc.com	Project Description: **- Captiveaire - Seismic Curb Analysis**	Job No: R16-06-271 Engineer: KML Date: 9/9/16 Chk By:	Sheet No: 03 B Rev: Date:

Dowel Type Fastener Capacity (NDS 2012)

0.5 in Lag Bolt into SPF	Detail Ref.	Sheet No: F1

$$LOADS \equiv \begin{pmatrix} \text{"LC"} & \text{"Tension [lbf]"} & \text{"Shear[lbf]"} \\ \text{"A"} & 600 & 100 \\ \text{"B"} & 980 & 120 \\ \text{"C"} & 0 & 0 \end{pmatrix}$$

$l_s \equiv 0.06$ Exact Thickness of Side Member [inches]

$t_{shim} \equiv 0$ Exact Thickness of Shim [inches]

$l_m \equiv 4.5$ Exact Thickness of Main Member [inches]

1/2 in Lag Screw (316 SS)

$$\begin{pmatrix} \text{"Unthreaded Shank Dia. [in]"} \\ \text{"Selected Fastener"} \\ \text{"Fastener Type"} \\ \text{"Root Diameter of Screw [in]"} \\ \text{"Bending Yield Strength [psi]"} \end{pmatrix} \begin{pmatrix} D \\ \text{Fastener} \\ \text{Type} \\ D_r \\ F_{yb} \end{pmatrix} = \begin{pmatrix} 0.5 \\ \text{"1/2 in Lag Screw (316 SS)"} \\ \text{"Lag"} \\ 0.37 \\ 65000 \end{pmatrix}$$

Side Member (Metal)

36 ksi Steel

Bearing Strength [psi]

$F_{es} = 87000$

Main Member / Wood

Spruce Pine-Fir

Specific Gravity

$G = 0.42$

(10) min. - Wind/Earthquakes

$C_D = 1.6$ load duration factor, 10.3.2

PENETRATION

$p = 3.94$ Penetration into wood [inches]

Included Tapered Tip

(NOTE: NOT THREAD ENAGEMENT)

$C_M := 1.0$ wet service factor, 10.3.3

$C_t := 1.0$ temperature factor, 10.3.4

$C_g := 1.0$ group action factor, 10.3.6

$C_\Delta := 1.0$ geometry factor, 11.5.1

$C_{eg} := 1.0$ end grain factor, 11.5.2

$C_{di} := 1.0$ diaphragm factor, 11.5.3

Calculations

$$W_1 := 2850 \cdot G^2 \cdot D \cdot (\text{Type} = \text{"Woodscrew"}) + \left[1800 \cdot G^{(3 \div 2)} \cdot D^{(3 \div 4)}\right] \cdot (\text{Type} = \text{"Lag"}) = 291.32 \qquad W_1 = 291.32 \cdot \#$$

$$F_{em} := 16600 \cdot G^{1.84} \cdot (D < 0.25) + \left[\left(6100 \cdot G^{1.45}\right) \div \left(\sqrt{D}\right)\right] \cdot (D \geq 0.25) = 2452.2$$

$\theta \equiv 90$ deg Angle of Load to Grain of Wood (dowel Capacity) $\quad K_\theta := 1 + 0.25 \cdot (\theta \div 90) = 1.25 \quad R_e := F_{em} \div F_{es} = 0.03 \quad R_t := l_m \div l_s = 75$

$$k_1 := \left[\sqrt{R_e + 2 \cdot R_e^2 \cdot \left(1 + R_t + R_t^2\right) + R_t^2 \cdot R_e^3} - R_e \cdot (1 + R_t)\right] \div (1 + R_e) = 0.87$$

$$k_2 := -1 + \sqrt{2 \cdot (1 + R_e) + \left[\left[2 \cdot F_{yb} \cdot (1 + 2 \cdot R_e) \cdot D_r^2\right] \div \left(3 \cdot F_{em} \cdot l_m^2\right)\right]} = 0.48$$

$$k_3 := -1 + \sqrt{\frac{2 \cdot (1 + R_e)}{R_e} + \left[\left[2 \cdot F_{yb} \cdot (2 + R_e) \cdot D_r^2\right] \div \left(3 \cdot F_{em} \cdot l_s^2\right)\right]} = 36.99$$

$$K_D := 2.2 \cdot (D_r \leq 0.17) + (10 \cdot D_r + 0.5) \cdot (0.17 < D_r \leq 0.25) = 0$$

$$R_{d1} := K_D \cdot (D_r \leq 0.25) + 4.0 \cdot K_\theta \cdot (0.25 < D_r \leq 1) = 5$$

$$R_{d2} := K_D \cdot (D_r \leq 0.25) + 3.6 \cdot K_\theta \cdot (0.25 < D_r \leq 1) = 4.5$$

$$R_{d3} := K_D \cdot (D_r \leq 0.25) + 3.2 \cdot K_\theta \cdot (0.25 < D_r \leq 1) = 4$$

$$Z_{Im} := (D_r \cdot l_m \cdot F_{em}) \div R_{d1} = 819 \quad Z_{Is} := (D_r \cdot l_s \cdot F_{es}) \div R_{d1} = 387 \quad Z_{II} := (k_1 \cdot D_r \cdot l_s \cdot F_{es}) \div R_{d2} = 374 \quad Z_{IIIm} := (k_2 \cdot D_r \cdot l_m \cdot F_{em}) \div [(1 + 2R_e) \cdot R_{d3}] = 463$$

$$Z_{IIIs} := \frac{k_3 \cdot D_r \cdot l_s \cdot F_{em}}{(2 + R_e) \cdot R_{d3}} = 248.89 \qquad Z_{IV} := \frac{D_r^2}{R_{d3}} \cdot \sqrt{\frac{2 \cdot F_{em} \cdot F_{yb}}{3 \cdot (1 + R_e)}} = 349.82$$

$$Z_1 := \min(Z_{Im}, Z_{Is}, Z_{II}, Z_{IIIm}, Z_{IIIs}, Z_{IV})$$

$$Z_1 \rightarrow \min(819, 387, 374, 463, 249, 350) \qquad Z_1 = 248.89 \cdot \#$$

$$Z' := Z_1 \cdot C_D \cdot C_M \cdot C_t \cdot C_g \cdot C_\Delta \cdot C_{eg} \cdot C_{di} = 398.22 \cdot \#$$

$$Z_\alpha(_\alpha) := (W' \cdot Z') \div \left[W' \cdot (\cos(_\alpha))^2 + Z' \cdot (\sin(_\alpha))^2\right] \qquad W' := W_1 \cdot C_D \cdot C_M \cdot C_t \cdot C_{eg} \cdot p_{ten} = 1013.8 \cdot \#$$

All. Shear $Z' = 398.22 \cdot \#$

All. Withdrawal $W' = 1013.8 \cdot \#$

Results

$$DATA = \begin{pmatrix} \text{"LC"} & \text{"Shear[lbf]"} & \text{"V.all [lbf]"} & \text{"I.v [lbf]"} & \text{"Tension [lbf]"} & \text{"T.all [lbf]"} & \text{"I.t [lbf]"} & \text{"}\alpha\text{ [deg]"} & \text{"Mag. [lbf]"} & \text{"All. Mag. [lbf]"} & \text{"I.mag."} \\ \text{"A"} & 100 & 398.22 & 0.25 & 600 & 1013.8 & 0.59 & 80.54 & 608.28 & 973.14 & 0.63 \\ \text{"B"} & 120 & 398.22 & 0.3 & 980 & 1013.8 & 0.97 & 83.02 & 987.32 & 991.17 & 1 \\ \text{"C"} & 0 & 398.22 & 0 & 0 & 1013.8 & 0 & 0 & 0 & 398.22 & 0 \end{pmatrix}$$

$$SUMMARY = \begin{pmatrix} \text{"LC"} & \text{"INTERACTION"} \\ \text{"A"} & \text{"0.63 < 1.00 } \therefore \text{ PASS"} \\ \text{"B"} & \text{"1 < 1.00 } \therefore \text{ PASS"} \\ \text{"C"} & \text{"0 < 1.00 } \therefore \text{ PASS"} \end{pmatrix}$$

Fastener = "1/2 in Lag Screw (316 SS)"

Material = "Spruce Pine-Fir" (G = 0.42)

$$\text{Predrill Notes} = \begin{bmatrix} \text{"Predrill Holes at 40\% - 70\% D"} \\ \begin{pmatrix} \text{"min [in]"} & \text{"max [in]"} \\ 0.2 & 0.35 \end{pmatrix} \end{bmatrix}$$

Spacing = "4 in. MIN"

Edge Distance = "1.25 in. MIN"

End Distance = "7.5 in. MIN"

NOTE = "Installer Shall Verify EXACTLY 2.5 inches of the THREADED Shaft (including Tip) of the Lag Bolt Is Engaged Into the Wood Substrate"

RICE ENGINEERING

Template: REI-MC-8740

105 School Creek Trail
Luxemburg, WI 54217
Phone: (920) 617-1042
Fax: (920) 617-1100
www.rice-inc.com

Project Description:

- Captiveaire -
Seismic Curb Analysis

Job No:	R16-06-271		
Engineer:	KML	Sheet No:	F1
Date:	9/9/16	Rev:	
Chk By:		Date:	

$T_{all} := 5676 \cdot lbf$ Allowable Tension

$V_{all} := 2984 \cdot lbf$ Allowable Shear

$T_{max} := 5000 \cdot lbf$ Target Tension

$V_{max} := \sqrt{1.00 - \left(T_{max} \div T_{all}\right)^2} \cdot V_{all} = 1412.32 lbf$ Corresponding Target Shear

TABLE 20.9: Fastener Capacity

STAINLESS STEEL - Alloy Groups 1, 2 and 3, Condition CW (UNC Treads)

Nominal Fastener Diameter & Threads per Inch	D Nominal Thread Diameter (in)	A(S) Tensile Stress Area (in2)	A(R) Thread Root Area (in2)	Allowable Tension (lbs)	Allowable Shear		Allowable Bearing (lbs)			Minimum Material Thickness (lbs) to Equal Tensile Capacity of Fastener (in)			Maximum Tensile Load (lbs) for Available 3/8" Plate Thickness		
					Single (lbs)	Double (lbs)	1/8" Steel A36	1/8" Aluminum 6063-T5	1/8" Aluminum 6063-T6	A36	6063-T5	6063-T6	3/8" Steel A36	3/8" Aluminum 6063-T5	3/8" Aluminum 6063-T6
#6-32	0.1380	0.0091	0.0078	303	150	300	900	253	345	0.1335	0.2538	0.1943	303	303	303
#8-32	0.1640	0.0140	0.0124	467	239	477	1,070	301	410	0.1733	0.3356	0.2466	467	467	467
#10-24	0.1900	0.0175	0.0151	584	292	583	1,240	348	475	0.1872	0.3410	0.2501	584	584	584
#12-24	0.2160	0.0242	0.0214	805	411	822	1,409	396	540	0.2269	> 3/8"	0.3016	805	734	805
1/4-20	0.2500	0.0318	0.0280	1,061	538	1,076	1,631	458	625	0.2534	> 3/8"	0.3373	1,061	865	1,061
5/16-18	0.3125	0.0524	0.0469	2,097	1,083	2,166	2,039	573	781	0.2867	> 3/8"	> 3/8"	2,097	1,303	1,776
3/8-16	0.3750	0.0775	0.0699	3,100	1,614	3,228	2,447	688	938	0.3181	> 3/8"	> 3/8"	3,100	1,572	2,144
7/16-14	0.4375	0.1063	0.0961	4,252	2,220	4,440	2,855	802	1,094	0.3442	> 3/8"	> 3/8"	4,252	1,873	2,554
1/2-13	0.5000	0.1419	0.1292	5,676	2,984	5,968	3,263	917	1,250	> 3/8"	> 3/8"	> 3/8"	5,642	2,140	2,918
9/16-12	0.5625	0.1819	0.1664	7,278	3,842	7,685	3,670	1,031	1,406	> 3/8"	> 3/8"	> 3/8"	6,444	2,444	3,333
5/8-11	0.6250	0.2260	0.2071	9,040	4,782	9,564	4,078	1,146	1,563	> 3/8"	> 3/8"	> 3/8"	7,148	2,711	3,697
3/4-10	0.7500	0.3345	0.3091	11,372	6,022	12,045	4,894	1,375	1,875	> 3/8"	> 3/8"	> 3/8"	8,612	3,266	4,454
7/8-9	0.8750	0.4617	0.4285	15,583	8,351	16,701	5,709	1,604	2,188	> 3/8"	> 3/8"	> 3/8"	10,158	3,853	5,254
1-8	1.0000	0.6057	0.5630	20,444	10,970	21,940	6,525	1,833	2,500	> 3/8"	> 3/8"	> 3/8"	11,696	4,437	6,050

STAINLESS STEEL - Alloy Groups 1, 2 and 3, Condition CW (Spaced Threads)

Nominal Fastener Diameter & Threads per Inch	D Nominal Thread Diameter (in)	K Basic Minor Diameter (in)	A(R) Thread Root Area (in2)	Allowable Tension (lbs)	Allowable Shear		Allowable Bearing (lbs)			Minimum Material Thickness (lbs) to Equal Tensile Capacity of Fastener (in)			Maximum Tensile Load (lbs) for Available 3/8" Plate Thickness		
					Single (lbs)	Double (lbs)	1/8" Steel A36	1/8" Aluminum 6063-T5	1/8" Aluminum 6063-T6	A36	6063-T5	6063-T6	3/8" Steel A36	3/8" Aluminum 6063-T5	3/8" Aluminum 6063-T6
#6-20	0.1380	0.0990	0.0077	257	148	296	900	253	345	0.1191	0.1695	0.1378	257	257	257
#8-18	0.1640	0.1160	0.0106	352	203	407	1,070	301	410	0.1437	0.1930	0.1567	352	352	352
#10-16	0.1900	0.1350	0.0143	477	275	551	1,240	348	475	0.1528	0.2225	0.1805	477	477	477
#12-14	0.2160	0.1570	0.0194	645	373	745	1,409	396	540	0.1820	0.2610	0.2115	645	645	645
1/4-14	0.2500	0.1850	0.0269	896	517	1,035	1,631	458	625	0.2181	0.2994	0.2379	896	896	896
5/16-12	0.3125	0.2360	0.0437	1,750	1,010	2,020	2,039	573	781	0.2839	> 3/8"	0.2990	1,750	1,681	1,750
3/8-12	0.3750	0.2990	0.0702	2,809	1,622	3,243	2,447	688	938	> 3/8"	> 3/8"	> 3/8"	2,773	2,017	2,751

Group 1,2,3-Cond. CW	≤ 5/8" Dia.	≥ 3/4" Dia.
F_U (Min. Ultimate Tensile Strength)	100,000 psi	85,000 psi
F_T (Allow. Tensile Stress, D≤1/4")	33,333 psi	N/A psi
F_T (Allow. Tensile Stress, D> 1/4")	40,000 psi	33,750 psi
F_V (Allowable Shear Strass; D≤1/4")	19,245 psi	N/A psi
F_V (Allowable Shear Strass; D>1/4")	23,094 psi	19,486 psi

For Diameters < 3/4"	Effective Area (UNC Threads)	Effective Area (Spaced Threads)
$F_T = F_U/SF$	$A(R) = \pi\ (D-1.2269/N)^2 / 4$	$A(R) = \pi K^2/4$
Allowable Tension = $F_T[A(S)]$	$A(S) = \pi\ (D-0.9743/N)^2 / 4$	$A(S) = \pi K^2/4$
F_V = Fu / (SF x sq rt (3))		
Allowable Single Shear =$F_V[A(R)]$		

NOTE 11:

1. Values are taken from AISC, ASTM, IFI, SAE and AA documents. K values for spaced threads are taken as the minimum values in IFI Fastener Handbook, 6th Ed. 2. Safety Factor used for fasteners with diameters 1/4" or less is 3.0, Safety Factor used for fasteners with diameters 5/16" or greater is 2.5.

3. Fasteners with diameters of 3/4" and greater are fabricated from different material than fasteners less than 3/4" in diameter.

4. For diameters of 3/4" and greater, F_y=45,00 psi. For these, tensile and shear yields govern the allowable tension and shear values (i.e., 0.75 F_y<F_u/SF

AAMA Allowables | Detail Ref. | Sheet No: F2

RICE ENGINEERING
105 School Creek Trail
Luxemburg, WI 54217
Phone: (920) 617-1042
Fax: (920) 617-1100
www.rice-inc.com

Template:

Project Description: **- Captiveaire - Seismic Curb Analysis**

Job No: R16-06-271

Engineer: KML | Sheet No: F2

Date: 9/9/16 | Rev:

Chk By: | Date:

$$T_{max} := \frac{1060 lbf}{1.45} = 731.03 lbf$$

$$V_{max} := \frac{260 \cdot lbf}{1.45} = 179.31 lbf$$

Kwik Bolt TZ	Detail Ref.	Sheet No: F3

Specifier's comments:

1 Input data

Anchor type and diameter:	**Kwik Bolt TZ - SS 316 1/2 (3 1/4)**
Effective embedment depth:	h_{ef} = 3.250 in., h_{nom} = 3.625 in.
Material:	AISI 316
Evaluation Service Report:	ESR-1917
Issued I Valid:	2/22/2016 | 5/1/2017
Proof:	Design method ACI 318 / AC193
Stand-off installation:	e_b = 0.000 in. (no stand-off); t = 0.250 in.
Anchor plate:	l_x x l_y x t = 3.000 in. x 3.000 in. x 0.250 in.; (Recommended plate thickness: not calculated
Profile:	no profile
Base material:	cracked concrete, 3000, f'_c = 3000 psi; h = 6.000 in.
Reinforcement:	tension: condition B, shear: condition B; no supplemental splitting reinforcement present edge reinforcement: none or < No. 4 bar
Seismic loads (cat. C, D, E, or F)	yes (D.3.3.6)

Geometry [in.] & Loading [lb, in.lb]

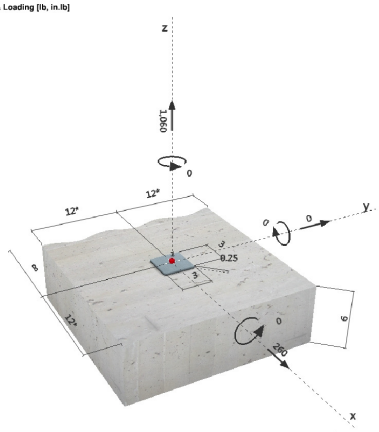

2 Load case/Resulting anchor forces

Load case: Design loads

Anchor reactions [lb]
Tension force: (+Tension, -Compression)

Anchor	Tension force	Shear force	Shear force x	Shear force y
1	1060	260	260	0

max. concrete compressive strain: - [‰]
max. concrete compressive stress: - [psi]
resulting tension force in (x/y)=(0.000/0.000): 1060 [lb]
resulting compression force in (x/y)=(0.000/0.000): 0 [lb]

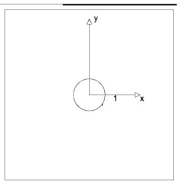

3 Tension load

	Load N_{ua} [lb]	Capacity ϕN_n [lb]	Utilization $\beta_N = N_{ua}/\phi N_n$	Status
Steel Strength*	1060	3466	31	OK
Pullout Strength*	N/A	N/A	N/A	N/A
Concrete Breakout Strength**	1060	1064	100	OK

* anchor having the highest loading **anchor group (anchors in tension)

3.1 Steel Strength

N_{sa} = ESR value — refer to ICC-ES ESR-1917
$\phi N_{sa} \geq N_{ua}$ — ACI 318-08 Eq. (D-1)

Variables

$A_{se,N}$ [in.²]	f_{uta} [psi]
0.10	115000

Calculations

N_{sa} [lb]
11554

Results

N_{sa} [lb]	ϕ_{steel}	$\phi_{ductile}$	ϕN_{sa} [lb]	N_{ua} [lb]
11554	0.750	0.400	3466	1060

3.2 Concrete Breakout Strength

$N_{cb} = \left(\frac{A_{Nc}}{A_{Nco}}\right) \psi_{ec,N}\, \psi_{c,N}\, \psi_{cp,N}\, N_b$ — ACI 318-08 Eq. (D-4)
$\phi N_{cb} \geq N_{ua}$ — ACI 318-08 Eq. (D-1)
A_{Nc} see ACI 318-08, Part D.5.2.1, Fig. RD.5.2.1(b)
$A_{Nco} = 9 h_{ef}^2$ — ACI 318-08 Eq. (D-6)
$\psi_{ec,N} = \left(\frac{1}{1 + \frac{2 e_N}{3 h_{ef}}}\right) \leq 1.0$ — ACI 318-08 Eq. (D-9)
$\psi_{ec,N} = 0.7 + 0.3 \left(\frac{c_{a,min}}{1.5 h_{ef}}\right) \leq 1.0$ — ACI 318-08 Eq. (D-11)
$\psi_{cp,N} = MAX\left(\frac{c_{a,min}}{c_{ac}}, \frac{1.5 h_{ef}}{c_{ac}}\right) \leq 1.0$ — ACI 318-08 Eq. (D-13)
$N_b = k_c\, \lambda \sqrt{f'_c}\, h_{ef}^{1.5}$ — ACI 318-08 Eq. (D-7)

Variables

h_{ef} [in.]	$e_{c1,N}$ [in.]	$e_{c2,N}$ [in.]	$c_{a,min}$ [in.]	$\psi_{c,N}$
3.250	0.000	0.000	12.000	1.000

c_{ac} [in.]	k_c	λ	f'_c [psi]
7.500	17	1	3000

Calculations

A_{Nc} [in.²]	A_{Nco} [in.²]	$\psi_{ec1,N}$	$\psi_{ec2,N}$	$\psi_{ec,N}$	$\psi_{cp,N}$	N_b [lb]
95.06	95.06	1.000	1.000	1.000	1.000	5455

Results

N_{cb} [lb]	$\phi_{concrete}$	$\phi_{seismic}$	$\phi_{ductile}$	ϕN_{cb} [lb]	N_{ua} [lb]
5455	0.650	0.750	0.400	1064	1060

4 Shear load

	Load V_{ua} [lb]	Capacity ϕV_n [lb]	Utilization $\beta_V = V_{ua}/\phi V_n$	Status
Steel Strength*	260	1789	15	OK
Steel failure (with lever arm)*	N/A	N/A	N/A	N/A
Pryout Strength**	260	2291	12	OK
Concrete edge failure in direction x+**	260	1325	20	OK

* anchor having the highest loading **anchor group (relevant anchors)

4.1 Steel Strength

$V_{sa,eq}$ = ESR value — refer to ICC-ES ESR-1917
$\phi V_{steel} = V_{ua}$ — ACI 318-08 Eq. (D-2)

Variables

$A_{se,V}$ [in.²]	f_{uta} [psi]
0.10	115000

Calculations

V_{sa} [lb]
6880

Results

V_{sa} [lb]	ϕ_{steel}	$\phi_{ductile}$	ϕV_{sa} [lb]	V_{ua} [lb]
6880	0.650	0.400	1789	260

4.2 Pryout Strength

$V_{cp} = k_{cp} \left[\left(\frac{A_{Nc}}{A_{Nco}}\right) \psi_{ed,N}\, \psi_{c,N}\, \psi_{cp,N}\, N_b\right]$ — ACI 318-08 Eq. (D-30)
$\phi V_{cp} \geq V_{ua}$ — ACI 318-08 Eq. (D-2)
A_{Nc} see ACI 318-08, Part D.5.2.1, Fig. RD.5.2.1(b)
$A_{Nco} = 9 h_{ef}^2$ — ACI 318-08 Eq. (D-6)
$\psi_{ec,N} = \left(\frac{1}{1 + \frac{2 e_N}{3 h_{ef}}}\right) \leq 1.0$ — ACI 318-08 Eq. (D-9)
$\psi_{ec,N} = 0.7 + 0.3 \left(\frac{c_{a,min}}{1.5 h_{ef}}\right) \leq 1.0$ — ACI 318-08 Eq. (D-11)
$\psi_{cp,N} = MAX\left(\frac{c_{a,min}}{c_{ac}}, \frac{1.5 h_{ef}}{c_{ac}}\right) \leq 1.0$ — ACI 318-08 Eq. (D-13)
$N_b = k_c\, \lambda \sqrt{f'_c}\, h_{ef}^{1.5}$ — ACI 318-08 Eq. (D-7)

Variables

k_{cp}	h_{ef} [in.]	$e_{c1,N}$ [in.]	$e_{c2,N}$ [in.]	$c_{a,min}$ [in.]
2	3.250	0.000	0.000	12.000

$\psi_{c,N}$	c_{ac} [in.]	k_c	λ	f'_c [psi]
1.000	7.500	17	1	3000

Calculations

A_{Nc} [in.²]	A_{Nco} [in.²]	$\psi_{ec1,N}$	$\psi_{ec2,N}$	$\psi_{ec,N}$	$\psi_{cp,N}$	N_b [lb]
95.06	95.06	1.000	1.000	1.000	1.000	5455

Results

V_{cp} [lb]	$\phi_{concrete}$	$\phi_{seismic}$	$\phi_{ductile}$	ϕV_{cp} [lb]	V_{ua} [lb]
10911	0.700	0.750	0.400	2291	260

RICE ENGINEERING
Template:

105 School Creek Trail
Luxemburg, WI 54217
Phone: (920) 617-1042
Fax: (920) 617-1100
www.rice-inc.com

Project Description:

- Captiveaire -
Seismic Curb Analysis

Job No:	R16-06-271		
Engineer:	KML	Sheet No:	F3
Date:	9/9/16	Rev:	
Chk By:		Date:	

4.3 Concrete edge failure in direction x+

$V_{cb} = \left(\frac{A_{vc}}{A_{vco}}\right) \psi_{ec,V}\, \psi_{h,V}\, \psi_{\alpha,V}\, \psi_{parallel,V}\, V_b$ — ACI 318-08 Eq. (D-21)

$\phi\, V_{cb} \geq V_{ua}$ — ACI 318-08 Eq. (D-2)

A_{vc}: see ACI 318-08, Part D.6.2.1, Fig. RD.6.2.1(b)

$A_{vco} = 4.5\, c_{a1}^2$ — ACI 318-08 Eq. (D-23)

$\psi_{ec,V} = \left(\frac{1}{1 + \frac{2e_v}{3c_{a1}}}\right) \leq 1.0$ — ACI 318-08 Eq. (D-26)

$\psi_{ec,V} = 0.7 + 0.3\left(\frac{c_{a2}}{1.5c_{a1}}\right) \leq 1.0$ — ACI 318-08 Eq. (D-28)

$\psi_{h,V} = \sqrt{\frac{1.5c_{a1}}{h_a}} \geq 1.0$ — ACI 318-08 Eq. (D-29)

$V_b = \left(7\left(\frac{l_e}{d_a}\right)^{0.2} \sqrt{d_a}\right) \lambda\, \sqrt{f'_c}\, c_{a1}^{1.5}$ — ACI 318-08 Eq. (D-24)

Variables

c_{a1} [in.]	c_{a2} [in.]	$e_{v,V}$ [in.]	$\psi_{c,V}$	h_a [in.]
8.000	12.000	0.000	1.000	6.000

l_e [in.]	λ	d_a [in.]	f'_c [psi]	$\psi_{parallel,V}$
3.250	1.000	0.500	3000	1.000

Calculations

A_{vc} [in.^{2}]	A_{vco} [in.^{2}]	$\psi_{ec,V}$	$\psi_{ed,V}$	$\psi_{h,V}$	V_b [lb]
144.00	288.00	1.000	1.000	1.414	8920

Results

V_{cb} [lb]	$\phi_{concrete}$	$\phi_{seismic}$	$\phi_{conductile}$	$\phi\, V_{cb}$ [lb]	V_{ua} [lb]
6307	0.700	0.750	0.400	1325	260

5 Combined tension and shear loads

β_N	β_V	ζ	Utilization $\beta_{N,V}$ [%]	Status
0.996	0.196	1.000	100	OK

$\beta_{NV} = (\beta_N + \beta_V) / 1.2 <= 1$

6 Warnings

- Load re-distributions on the anchors due to elastic deformations of the anchor plate are not considered. The anchor plate is assumed to be sufficiently stiff, in order not to be deformed when subjected to the loading! Input data and results must be checked for agreement with the existing conditions and for plausibility!
- Condition A applies when supplementary reinforcement is used. The Φ factor is increased for non-steel Design Strengths except Pullout Strength and Pryout strength. Condition B applies when supplementary reinforcement is not used and for Pullout Strength and Pryout Strength. Refer to your local standard.
- Refer to the manufacturer's product literature for cleaning and installation instructions.
- Checking the transfer of loads into the base material and the shear resistance are required in accordance with ACI 318 or the relevant standard!
- An anchor design approach for structures assigned to Seismic Design Category C, D, E or F is given in ACI 318-08 Appendix D, Part D.3.3.4 that requires the governing design strength of an anchor or group of anchors be limited by ductile steel failure. If this is NOT the case, Part D.3.3.5 requires that the attachment that the anchor is connecting to the structure shall be designed so that the attachment will undergo ductile yielding at a load level corresponding to anchor forces no greater than the controlling design strength. In lieu of D.3.3.4 and D.3.3.5, the minimum design strength of the anchors shall be multiplied by a reduction factor per D.3.3.6 .
  An alternative anchor design approach to ACI 318-08, Part D.3.3 is given in IBC 2009, Section 1908.1.9. This approach contains "Exceptions" that may be applied in lieu of D.3.3 for applications involving "non-structural components" as defined in ASCE 7, Section 13.4.2.
  An alternative anchor design approach to ACI 318-08, Part D.3.3 is given in IBC 2009, Section 1908.1.9. This approach contains "Exceptions" that may be applied in lieu of D.3.3 for applications involving "wall out-of-plane forces" as defined in ASCE 7, Equation 12.11-1 or Equation 12.14-10.
- It is the responsibility of the user when inputting values for brittle reduction factors ($\phi_{conductile}$) different than those noted in ACI 318-08, Part D.3.3.6 to determine if they are consistent with the design provisions of ACI 318-08, ASCE 7 and the governing building code.
  Selection of $\phi_{conductile}$ = 1.0 as a means of satisfying ACI 318-08, Part D.3.3.5 assumes the user has designed the attachment that the anchor is connecting to undergo ductile yielding at a force level <= the design strengths calculated per ACI 318-08, Part D.3.3.3.

Fastening meets the design criteria!

7 Installation data

Anchor plate, steel: -
Profile: no profile
Hole diameter in the fixture: d_f = 0.563 in.
Plate thickness (input): 0.250 in.
Recommended plate thickness: not calculated
Drilling method: Hammer drilled
Cleaning: Manual cleaning of the drilled hole according to instructions for use is required.

Anchor type and diameter: Kwik Bolt TZ - SS 316 1/2 (3 1/4)
Installation torque: 480.001 in.lb
Hole diameter in the base material: 0.500 in.
Hole depth in the base material: 4.000 in.
Minimum thickness of the base material: 6.000 in.

7.1 Recommended accessories

Drilling	Cleaning	Setting
• Suitable Rotary Hammer • Properly sized drill bit	• Manual blow-out pump	• Torque wrench • Hammer

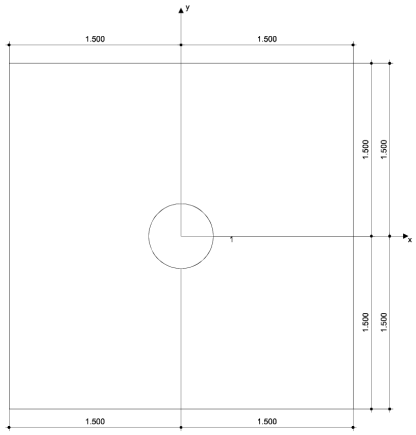

Coordinates Anchor in.

Anchor	x	y	c_{-x}	c_{+x}	c_{-y}	c_{+y}
1	0.000	0.000	-	12.000	12.000	12.000

8 Remarks; Your Cooperation Duties

- Any and all information and data contained in the Software concern solely the use of Hilti products and are based on the principles, formulas and security regulations in accordance with Hilti's technical directions and operating, mounting and assembly instructions, etc., that must be strictly complied with by the user. All figures contained therein are average figures, and therefore use-specific tests are to be conducted prior to using the relevant Hilti product. The results of the calculations carried out by means of the Software are based essentially on the data you put in. Therefore, you bear the sole responsibility for the absence of errors, the completeness and the relevance of the data to be put in by you. Moreover, you bear sole responsibility for having the results of the calculation checked and cleared by an expert, particularly with regard to compliance with applicable norms and permits, prior to using them for your specific facility. The Software serves only as an aid to interpret norms and permits without any guarantee as to the absence of errors, the correctness and the relevance of the results or suitability for a specific application.
- You must take all necessary and reasonable steps to prevent or limit damage caused by the Software. In particular, you must arrange for the regular backup of programs and data and, if applicable, carry out the updates of the Software offered by Hilti on a regular basis. If you do not use the AutoUpdate function of the Software, you must ensure that you are using the current and thus up-to-date version of the Software in each case by carrying out manual updates via the Hilti Website. Hilti will not be liable for consequences, such as the recovery of lost or damaged data or programs, arising from a culpable breach of duty by you.